Test Report issued under the responsibility of:

TEST REPORT
IEC 60598-2-1
Luminaires
Part 2: Particular requirements
Section 1: Fixed general purpose luminaires

Report Number.....:	6054375.50
Date of issue.....:	2019-07-02
Total number of pages.....	149 pages (including this page 1)
Name of Testing Laboratory preparing the Report.....:	DEKRA Testing and Certification (Shanghai) Ltd. 3F, #250 Jiangchangsan Road, Building 16, Headquarter Economy Park Shibei Hi-Tech Park, Jing'an District, Shanghai, 200436, China
Applicant's name .....:	Benchmark Smart Lighting Co.,Ltd
Address.....:	No.81 Chunlan Road, Xiangcheng District, JiangSu, PRC
Test specification:	
Standard.....:	IEC 60598-2-1:1979, AMD1:1987 used in conjunction with IEC 60598-1:2014, AMD1:2017
Test procedure .....:	CB Scheme
Non-standard test method .....:	N/A
Test Report Form No. .....:	IEC60598_2_1F
Test Report Form(s) Originator ....:	Intertek Semko AB
Master TRF.....:	Dated 2017-10

Copyright © 2017 IEC System of Conformity Assessment Schemes for Electrotechnical Equipment and Components (IECEE System). All rights reserved.

This publication may be reproduced in whole or in part for non-commercial purposes as long as the IECEE is acknowledged as copyright owner and source of the material. IECEE takes no responsibility for and will not assume liability for damages resulting from the reader's interpretation of the reproduced material due to its placement and context.

If this Test Report Form is used by non-IECEE members, the IECEE/IEC logo and the reference to the CB Scheme procedure shall be removed.

This report is not valid as a CB Test Report unless signed by an approved CB Testing Laboratory and appended to a CB Test Certificate issued by an NCB in accordance with IECEE 02.

General disclaimer:

The test results presented in this report relate only to the object tested.
This report shall not be reproduced, except in full, without the written approval of the Issuing CB Testing Laboratory. The authenticity of this Test Report and its contents can be verified by contacting the NCB, responsible for this Test Report.

Test item description ..... :	LED fixed luminaire
Trade Mark ..... :	
Manufacturer ..... :	Benchmark Smart Lighting Co.,Ltd No.81 Chunlan Road, Xiangcheng District, JiangSu, PRC
Model/Type reference ..... :	BM-PL-XXXXX series; BM-TPL-XXXXX series; BM-FPL-XXXXX series; BM-BPL-XXXXX series (for details see model list)
Ratings ..... :	220-240 Vac; 50/60 Hz; max. 80W; class II; IP20 (for details see model list)

Responsible Testing Laboratory (as applicable), testing procedure and testing location(s):

☒	**CB Testing Laboratory:**	DEKRA Testing and Certification (Shanghai) Ltd.	
Testing location/ address.....:		3/F, #250 Jiangchangsan Road, Building 16, Headquarter Economy Park Shibei Hi-Tech Park, Jing'an District, Shanghai, 200436, China	
Tested by (name, function, signature).....:		Astro Ma	
Approved by (name, function, signature)...:		Lix Li	
☐	~~**Testing procedure: CTF Stage 1:**~~		
Testing location/ address.....:			
Tested by (name, function, signature).....:			
Approved by (name, function, signature)...:			
☐	~~**Testing procedure: CTF Stage 2:**~~		
Testing location/ address.....:			
Tested by (name + signature) .....:			
Witnessed by (name, function, signature) .:			
Approved by (name, function, signature)...:			
☐	~~**Testing procedure: CTF Stage 3:**~~		
☐	~~**Testing procedure: CTF Stage 4:**~~		
Testing location/ address.....:			
Tested by (name, function, signature).....:			
Witnessed by (name, function, signature) .:			
Approved by (name, function, signature)...:			
Supervised by (name, function, signature) :			

List of Attachments (including a total number of pages in each attachment): **N/A**	
Summary of testing:	
Tests performed (name of test and test clause): **6037887.50 (original report)** All applicable tests have done in CBTL. **6054375.50 (Amendment 1 report)** IEC60598-1: Cl 1.6 (4) construction Cl 1.10 (5) External and internal wiring Cl 1.12 (12) Endurance test and thermal test Cl 1.14 (10) Insulation resistance and electric strength LED driver LD series and BK-PPL042 series were tested in appliance according to IEC 61347-1:2015; IEC 61347-2-13:2014+A1:2016; EN 61347-1:2015 and EN 61347-2-13:2014+A1:2017	**Testing location:** DEKRA Testing and Certification (Shanghai) Ltd. 3F, #250 Jiangchangsan Road, Building 16, Headquarter Economy Park Shibei Hi-Tech Park, Jing'an District, Shanghai, 200436, China
Summary of compliance with National Differences: **List of countries addressed: European standards** ☒ **The product fulfils the requirements of** EN 60598-1:2015+A1:2018 EN 60598-2-1:1989 EN 62493: 2015	

Copy of marking plate:

The artwork below may be only a draft. The use of certification marks on a product must be authorized by the respective NCBs that own these marks.

Label on luminaire enclosure:

Label on driver enclosure of LD series:

Label on driver enclosure of BK-PPL042 series:

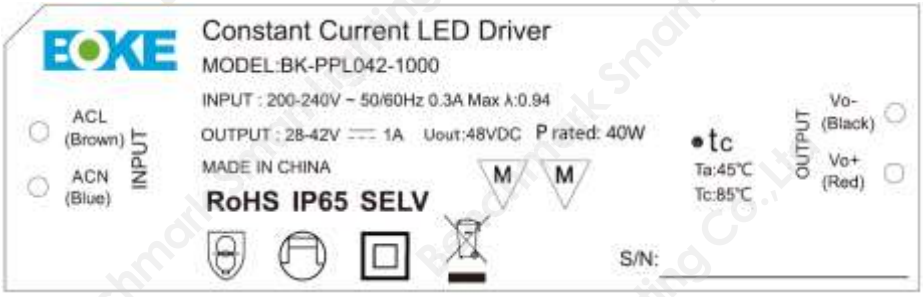

Note:

1. The height of graphical symbols shall not be less than 5 mm. The height of letters and numerals either shown separately or with or as part of symbols shall not be less than 2 mm.
2. The symbol combination of CE logo should have a minimum height of 5 mm and be marked if the end products would be sold to European Union.
3. The symbol combination of WEEE logo shall have a minimum height of 7 mm.

Test item particulars.....:	--
Classification of installation and use.....:	Class II and IP20
Supply Connection.....:	Supply cord
.....:	--
Possible test case verdicts:	
- test case does not apply to the test object.....:	N/A
- test object does meet the requirement.....:	P (Pass)
- test object does not meet the requirement.....:	F (Fail)
Testing.....:	
Date of receipt of test item .....:	2019-05-13
+Date (s) of performance of tests.....:	2019-05-13 ~2019-06-06

General remarks:

The measurement result is considered in conformance with the requirement if it is within the prescribed limit, It is not necessary to calculate the uncertainty associated with the measurement result, unless the specification, standard or customer have special requirements.

The test results presented in this report relate only to the object tested.

This report shall not be reproduced, except in full, without the written approval of the Issuing testing laboratory.

This report is not used for social proof function in China market.

"(See Enclosure #)" refers to additional information appended to the report.
"(See appended table)" refers to a table appended to the report.

Throughout this report a ☒ comma / ☐ point is used as the decimal separator.

Clause numbers between brackets refer to clauses in IEC 60598-1

Following standards were considered:

- IEC 60598-1: 2014+A1:2017
- IEC 60598-2-1: 1979 + A1: 1987

- EN 60598-1: 2015+A1:2018
- EN 60598-2-1: 1989
- EN 62493: 2015

Manufacturer's Declaration per sub-clause 4.2.5 of IECEE 02:

The application for obtaining a CB Test Certificate includes more than one factory location and a declaration from the Manufacturer stating that the sample(s) submitted for evaluation is (are) representative of the products from each factory has been provided ..... :	☐ **Yes** ☒ **Not applicable**

When differences exist; they shall be identified in the General product information section.

Name and address of factory (ies) ..... : Benchmark Smart Lighting Co.,Ltd
No.81 Chunlan Road, Xiangcheng District, JiangSu, PRC

General product information:

Original report:

All the models covered this report are designed for indoor use only and non replaceable light sources.

The products are class II fixed luminaires with independent certified SELV LED driver. All the drivers have same circuit diagram and PCB layout except different power consumption. The products have similar mechanical and electrical construction except different rating and dimension. Deviations were listed in annex model list.

Full tests were performed on model BM-TPL24040 with highest rated wattage and following tests were performed on model BM-PL24040 and BM-TPL00040 with different shape.

- Cl 1.10 (5.2.10.3) pull test
- Cl 1.14 (10.2.2) electric strength test
- Cl 1.6 (4.13.1) impact tests

LED modules were tested in appliance according to IEC 62031:2008+A1:2012+A2:2014 and EN 62031: 2008 + A1:2013 + A2:2015

The products were tested according to IEC 62471:2006; EN 62471:2008; IEC/TR 62778:2014 and classified as RG0. Refer to DEKRA test report 6037888.50P.

The products comply with EMF requirement according to IEC 62493:2009; IEC 62493:2015; EN 62493:2010 and EN 62493:2015. Refer to DEKRA test report 6037889.10.

Amendment 1 report:

The original report 6037887.50, dated 2018-11-07 and CB certificate No. NL-55282 dated 2018-11-08 was modified to include the following changes / additions, which was considered as technical modifications:

- Add several new luminaire appearances, and model list is updated
- Some certified independent SELV LED drivers were added and listed in “Critical components information” with bold letters in addition to the original drivers.
- Some alternative components were added in critical component list.
- Add two series LED driver LD series and BK-PPL042 series. Critical component list and model list are updated

After review, construction check, endurance test and thermal test were carried out on model BM-PL25080 with driver no. LC 44/1050/42 fixC SR ADV2 with max rated power, and construction check test on model BM-FPL72060 with LED driver no. BK-PUL060A-2000Ad due to its new appearance.

Thermal test was also carried out on the following models:

- Model BM-PL25060 with driver no. BK-PLL056-1400.
- Model BM-FPL72060 with driver no. BK-PUL060A-2000Ad.
- Model BM-PL23048 with driver no. DL-50W1A15-LEF

LED driver LD series and BK-PPL042 series were tested in appliance according to IEC 61347-1:2015; IEC 61347-2-13:2014+A1:2016; EN 61347-1:2015 and EN 61347-2-13:2014+A1:2017

After review, all the tests in “Summary of testing” have been done.

The products were tested according to IEC/TR 62778:2014 and classified as RG1. Refer to DEKRA test report 6054376.50P.

The products were deemed to comply with the requirements of EN 62493:2015.

IEC 60598-2-1			
Clause	Requirement + Test	Result - Remark	Verdict

1.2 (0)	**GENERAL TEST REQUIREMENTS**		P
1.2 (0.3)	More sections applicable ..... :	Yes ☐ No ☒ Section/s:	—
1.2 (0.5)	Components	(see Annex 1)	—
1.2 (0.7)	**Information for luminaire design in light sources standards**		—
1.2 (0.7.2)	Light source safety standard ..... :	IEC 62031	—
	Luminaire design in the light source safety standard		P

1.4 (2)	**CLASSIFICATION OF LUMINAIRES**		P
1.4 (2.2)	Type of protection ..... :	Class II	P
1.4 (2.3)	Degree of protection ..... :	IP20	—
1.4 (2.4)	Luminaire suitable for direct mounting on normally flammable surfaces ..... :	Yes ☒ No ☐	—
1.4 (2.5)	Luminaire for normal use ..... :	Yes ☒ No ☐	—
	Luminaire for rough service ..... :	Yes ☐ No ☐	—

1.5 (3)	**MARKING**		P
1.5 (3.2)	Mandatory markings		P
	Position of the marking		P
	Format of symbols/text		P
1.5 (3.3)	Additional information		P
	Language of instructions	English	P
1.5 (3.3.1)	Combination luminaires		N/A
1.5 (3.3.2)	Nominal frequency in Hz	50/60 Hz	P
1.5 (3.3.3)	Operating temperature		N/A
1.5 (3.3.5)	Wiring diagram		P
1.5 (3.3.6)	Special conditions		N/A
1.5 (3.3.7)	Metal halide lamp luminaire – warning		N/A
1.5 (3.3.8)	Limitation for semi-luminaires		N/A
1.5 (3.3.9)	Power factor and supply current		P
1.5 (3.3.10)	Suitability for use indoors		P
1.5 (3.3.11)	Luminaires with remote control		N/A
1.5 (3.3.12)	Clip-mounted luminaire – warning		N/A
1.5 (3.3.13)	Specifications of protective shields		N/A
1.5 (3.3.14)	Symbol for nature of supply	ac	P

IEC 60598-2-1			
Clause	Requirement + Test	Result - Remark	Verdict
1.5 (3.3.15)	Rated current of socket outlet		N/A
1.5 (3.3.16)	Rough service luminaire		N/A
1.5 (3.3.17)	Mounting instruction for type Y, type Z and some type X attachments	Type X attachment	P
1.5 (3.3.18)	Non-ordinary luminaires with PVC cable		N/A
1.5 (3.3.19)	Protective conductor current in instruction if applicable		N/A
1.5 (3.3.20)	Provided with information if not intended to be mounted within arm's reach		N/A
1.5 (3.3.21)	Non replaceable and non-user replaceable light sources information provided	Non-replaceable light sources	P
1.5 (3.3.22)	Controllable luminaires, classification of insulation provided		N/A
1.5 (3.3.23)	Luminaire without controlgear provided with necessary information for selection of appropriate component		N/A
1.5 (3.3.24)	If not supplied with terminal block, information on the packaging		N/A
1.5 (3.4)	Test with water		P
	Test with hexane		P
	Legible after test		P
	Label attached		P
1.6 (4)	**CONSTRUCTION**		P
1.6 (4.2)	Components replaceable without difficulty		N/A
1.6 (4.3)	Wireways smooth and free from sharp edges		P
1.6 (4.4)	**Lampholders**		N/A
1.6 (4.4.1)	Integral lampholder		N/A
1.6 (4.4.2)	Wiring connection		N/A
1.6 (4.4.3)	Lampholder for end-to-end mounting		N/A
1.6 (4.4.4)	Positioning		N/A
	- pressure test (N) ..... :		—
	After test the lampholder comply with relevant standard sheets and show no damage		N/A
	After test on single-capped lampholder the lampholder have not moved from its position and show no permanent deformation		N/A
	- bending test (N) ..... :		—

IEC 60598-2-1			
Clause	Requirement + Test	Result - Remark	Verdict
	After test the lampholder have not moved from its position and show no permanent deformation		N/A
1.6 (4.4.5)	Peak pulse voltage		N/A
1.6 (4.4.6)	Centre contact		N/A
1.6 (4.4.7)	Parts in rough service luminaires resistant to tracking		N/A
1.6 (4.4.8)	Lamp connectors		N/A
1.6 (4.4.9)	Caps and bases correctly used		N/A
1.6 (4.4.10)	Light source for lampholder or connection according IEC 60061 not connected another way		N/A
1.6 (4.5)	**Starter holders**		N/A
	Starter holder in luminaires other than class II		N/A
	Starter holder class II construction		N/A
1.6 (4.6)	**Terminal blocks**		N/A
	Tails		N/A
	Unsecured blocks		N/A
1.6 (4.7)	**Terminals and supply connections**		**P**
1.6 (4.7.1)	Contact to metal parts		N/A
1.6 (4.7.2)	Test 8 mm live conductor		P
	Test 8 mm earth conductor		N/A
1.6 (4.7.3)	Terminals for supply conductors		P
1.6 (4.7.3.1)	Welded method and material		N/A
	- stranded or solid conductor		N/A
	- spot welding		N/A
	- welding between wires		N/A
	- Type Z attachment		N/A
	- mechanical test according to 15.6.2		N/A
	- electrical test according to 15.6.3		N/A
	- heat test according to 15.6.3.2.3 and 15.6.3.2.4		N/A
1.6 (4.7.4)	Terminals other than supply connection		P
1.6 (4.7.5)	Heat-resistant wiring/sleeves		N/A
1.6 (4.7.6)	Multi-pole plug		N/A
	- test at 30 N		N/A
1.6 (4.8)	**Switches**		P
	- adequate rating		P
	- adequate fixing		P

IEC 60598-2-1			
Clause	Requirement + Test	Result - Remark	Verdict
	- polarized supply		N/A
	- compliance with IEC 61058-1 for electronic switches		P
1.6 (4.9)	**Insulating lining and sleeves**		N/A
1.6 (4.9.1)	Retainment		N/A
	Method of fixing ..... :		N/A
1.6 (4.9.2)	Insulated linings and sleeves:		N/A
	Resistant to a temperature > 20 °C to the wire temperature or		N/A
	a) & c) Insulation resistance and electric strength		N/A
	b) Ageing test. Temperature (°C) ..... :		N/A
1.6 (4.10)	**Double or reinforced insulation**		P
1.6 (4.10.1)	No contact, mounting surface – accessible metal parts – wiring of basic insulation		P
	Safe installation fixed luminaires		P
	Capacitors and switches		N/A
	Interference suppression capacitors according to IEC 60384-14		N/A
1.6 (4.10.2)	Assembly gaps:		N/A
	- not coincidental		N/A
	- no straight access with test probe		N/A
1.6 (4.10.3)	Retainment of insulation:		P
	- fixed		P
	- unable to be replaced; luminaire inoperative		P
	- sleeves retained in position		N/A
	- lining in lampholder		N/A
1.6 (4.10.4)	Protective impedance device		N/A
	Double or reinforced insulation bridged by appropriate and at least two resistors or two Y2 capacitors or one Y1 capacitor		N/A
	Y1 or Y2 capacitors comply with IEC 60384-14		N/A
	Resistors comply with test (a) in 14.1 of IEC 60065		N/A
1.6 (4.11)	**Electrical connections and current-carrying parts**		P
1.6 (4.11.1)	Contact pressure		P
1.6 (4.11.2)	Screws:		N/A
	- self-tapping screws		N/A

IEC 60598-2-1			
Clause	Requirement + Test	Result - Remark	Verdict
	- thread-cutting screws		N/A
1.6 (4.11.3)	Screw locking:		N/A
	- spring washer		N/A
	- rivets		N/A
1.6 (4.11.4)	Material of current-carrying parts		P
1.6 (4.11.5)	No contact to wood or mounting surface		P
1.6 (4.11.6)	Electro-mechanical contact systems		N/A
1.6 (4.12)	**Screws and connections (mechanical) and glands**		N/A
1.6 (4.12.1)	Screws not made of soft metal		N/A
	Screws of insulating material		N/A
	Torque test: torque (Nm); part..... :		N/A
	Torque test: torque (Nm); part..... :		N/A
	Torque test: torque (Nm); part..... :		N/A
1.6 (4.12.2)	Screws with diameter < 3 mm screwed into metal		N/A
1.6 (4.12.4)	Locked connections:		N/A
	- fixed arms; torque (Nm) ..... :		N/A
	- lampholder; torque (Nm) ..... :		N/A
	- push-button switches; torque 0,8 Nm ..... :		N/A
1.6 (4.12.5)	Screwed glands; force (Nm)..... :		N/A
1.6 (4.13)	**Mechanical strength**		**P**
1.6 (4.13.1)	Impact tests:		P
	- fragile parts; energy (Nm) ..... :	Light guide plate; 0,2 Nm	P
	- other parts; energy (Nm)..... :	Enclosure; 0,35 Nm Lamp diffuser; 0,35 Nm	P
	1) live parts		P
	2) linings		N/A
	3) protection		P
	4) covers		N/A
1.6 (4.13.2)	Metal parts have adequate mechanical strength		N/A
1.6 (4.13.3)	Straight test finger		N/A
1.6 (4.13.4)	Rough service luminaires		N/A
	- IP54 or higher		N/A
	a) fixed		N/A
	b) hand-held		N/A
	c) delivered with a stand		N/A

IEC 60598-2-1			
Clause	Requirement + Test	Result - Remark	Verdict
	d) for temporary installations and suitable for mounting on a stand		N/A
1.6 (4.13.6)	Tumbling barrel		N/A
1.6 (4.14)	**Suspensions, fixings and means of adjusting**		**P**
1.6 (4.14.1)	Mechanical load:		P
	A) four times the weight		P
	B) torque 2,5 Nm		P
	C) bracket arm; bending moment (Nm)..... :		N/A
	D) load track-mounted luminaires		N/A
	E) clip-mounted luminaires, glass-shelve. Thickness (mm) ..... :		N/A
	Metal rod. diameter (mm) ..... :		N/A
	Fixed luminaire or independent control gear without fixing devices		N/A
1.6 (4.14.2)	Load to flexible cables		P
	Mass (kg) ..... :	1,85 kg for BM-TPL00040	—
	Stress in conductors (N/mm²) ..... :	9,25<15 (required)	P
	Mass (kg) of semi-luminaire ..... :		N/A
	Bending moment (Nm) of semi-luminaire ..... :		N/A
1.6 (4.14.3)	Adjusting devices:		N/A
	- flexing test; number of cycles..... :		N/A
	- strands broken ..... :		N/A
	- electric strength test afterwards		N/A
1.6 (4.14.4)	Telescopic tubes: cords not fixed to tube; no strain on conductors		N/A
1.6 (4.14.5)	Guide pulleys		N/A
1.6 (4.14.6)	Strain on socket-outlets		N/A
1.6 (4.15)	**Flammable materials**		**P**
	- glow-wire test 650°C ..... :	See Test Table 1.15 (13.3.2)	P
	- spacing ≥30 mm		N/A
	- screen withstanding test of 13.3.1		N/A
	- screen dimensions		N/A
	- no fiercely burning material		P
	- thermal protection		N/A
	- electronic circuits exempted		N/A
1.6 (4.15.2)	Luminaires made of thermoplastic material with lamp control gear		P

IEC 60598-2-1			
Clause	Requirement + Test	Result - Remark	Verdict
	a) construction		P
	b) temperature sensing control		N/A
	c) surface temperature		N/A
1.6 (4.16)	**Luminaires for mounting on normally flammable surfaces**		**P**
	No lamp control gear ..... :	(compliance with Section 12)	N/A
	Provided with adaptor for a track meet the requirements for direct mounting on normally flammable surfaces		N/A
1.6 (4.16.1)	Lamp control gear spacing:		N/A
	- spacing 35 mm		N/A
	- spacing 10 mm		N/A
1.6 (4.16.2)	Thermal protection:		N/A
	- in lamp control gear		N/A
	- external		N/A
	- fixed position		N/A
	- temperature marked lamp control gear		N/A
1.6 (4.16.3)	Design to satisfy the test of 12.6	(see clause 12.6)	N/A
1.6 (4.17)	**Drain holes**		N/A
	Clearance at least 5 mm		N/A
1.6 (4.18)	**Resistance to corrosion**		P
1.6 (4.18.1)	- rust-resistance		N/A
1.6 (4.18.2)	- season cracking in copper		N/A
1.6 (4.18.3)	- corrosion of aluminium		N/A
1.6 (4.19)	Ignitors compatible with ballast		N/A
1.6 (4.20)	Rough service vibration		N/A
1.6 (4.21)	**Protective shield**		N/A
1.6 (4.21.1)	Shield fitted if tungsten halogen lamps or metal halide lamps		N/A
	Shield of glass if tungsten halogen lamps		N/A
1.6 (4.21.2)	Particles from a shattering lamp not impair safety		N/A
1.6 (4.21.3)	No direct path		N/A
1.6 (4.21.4)	Impact test on shield		N/A
	Glow-wire test on lamp compartment..... :	See Test Table 1.15 (13.3.2)	N/A
1.6 (4.22)	Attachments to lamps not cause overheating or damage		N/A
1.6 (4.23)	Semi-luminaires comply Class II		N/A

IEC 60598-2-1			
Clause	Requirement + Test	Result - Remark	Verdict
1.6 (4.24)	**Photobiological hazards**		**P**
1.6 (4.24.1)	No excessive UV radiation if tungsten halogen lamps and metal halide lamps (Annex P)		N/A
1.6 (4.24.2)	Retinal blue light hazard		P
	Class of risk group assessed according to IEC/TR 62778 ..... :	RG1	—
	Luminaires with E_{thr} :		N/A
	a) Fixed luminaires		N/A
	- distance x m, borderline between RG1 and RG2 .. :		N/A
	- marking and instruction according 3.2.23		N/A
	b) Portable and handheld luminaires		N/A
	- marking according 3.2.23 if RG1 exceeded at 200 mm according to IEC/TR 62778		N/A
	Portable luminaires for children IEC 60598-2-10 and Mains socket outlet nightlights IEC 60598-2-12 not exceed RG1 at 200 mm according to IEC/62778		N/A
1.6 (4.25)	**Mechanical hazard**		**P**
	No sharp point or edges		P
1.6 (4.26)	**Short-circuit protection**		N/A
1.6 (4.26.1)	Adequate means of uninsulated accessible SELV parts		N/A
1.6 (4.26.2)	Short-circuit test with test chain according 4.26.3		N/A
	Test chain not melt through		N/A
	Test sample not exceed values of Table 12.1 and 12.2		N/A
1.6 (4.27)	**Terminal blocks with integrated screwless earthing contacts**		N/A
	Test according Annex V		N/A
	Pull test of terminal fixing (20 N)		N/A
	After test, resistance < 0,05 Ω		N/A
	Pull test of mechanical connection (50 N)		N/A
	After test, resistance < 0,05 Ω		N/A
	Voltage drop test, resistance < 0,05 Ω		N/A
1.6 (4.28)	**Fixing of thermal sensing control**		N/A
	Not plug-in or easily replaceable type		N/A
	Reliably kept in position		N/A
	No adhesive fixing if UV radiations from a lamp can degrade the fixing		N/A

IEC 60598-2-1			
Clause	Requirement + Test	Result - Remark	Verdict
	Not outside the luminaire enclosure		N/A
	Test of adhesive fixing:		N/A
	Max. temperature on adhesive material (°C) ..... :		—
	100 cycles between t min and t max		N/A
	Temperature sensing control still in position		N/A
1.6 (4.29)	**Luminaires with non-replaceable light source**		P
	Not possible to replace light source		P
	Live part not accessible after parts have been opened by hand or tools		P
1.6 (4.30)	**Luminaires with non-user replaceable light source**		N/A
	If protective cover provide protection against electric shock and marked with “caution, electric shock risk” symbol:		N/A
	Minimum two fixing means		N/A
1.6 (4.31)	**Insulation between circuits**		**P**
	Circuits insulated from LV supply fulfil requirements according 4.31.1 – 4.31.3		P
	Controllable luminaires requiring same level of insulation for all components, the insulation between control terminals and LV supply fulfil requirements according 4.31.1 – 4.31.3		N/A
1.6 (4.31.1)	SELV circuits		P
	Used SELV source		P
	Voltage ≤ ELV		P
	Insulating of SELV circuits from LV supply		P
	Insulating of SELV circuits from other non SELV circuits		N/A
	Insulating of SELV circuits from FELV		N/A
	Insulating of SELV circuits from other SELV circuits		N/A
	SELV circuits insulated from accessible parts according Table X.1		P
	Plugs not able to enter socket-outlets of other voltage systems		N/A
	Socket outlets does not admit plugs of other voltage systems		N/A
	Plugs and socket-outlets does not have protective conductor contact		N/A
1.6 (4.31.2)	FELV circuits		N/A
	Used FELV source		N/A
	Voltage ≤ ELV		N/A

IEC 60598-2-1			
Clause	Requirement + Test	Result - Remark	Verdict
	Insulating of FELV circuits from LV supply		N/A
	FELV circuits insulated from accessible parts according Table X.1		N/A
	Plugs not able to enter socket-outlets of other voltage systems		N/A
	Socket outlets does not admit plugs of other voltage systems		N/A
	Socket-outlets does not have protective conductor contact		N/A
1.6 (4.31.3)	Other circuits		P
	Other circuits insulated from accessible parts according Table X.1		P
	Class II construction with equipotential bonding for protection against indirect contacts with live parts:		N/A
	- conductive parts are connected together		N/A
	- test according 7.2.3		N/A
	- conductive part not cause an electric shock in case of an insulation fault		N/A
	- equipotential bonding in master/slave applications		N/A
	- master luminaire provided with terminal for accessible conductive parts of slave luminaires		N/A
	- slave luminaire constructed as class I		N/A
1.6 (4.32)	**Overvoltage protective devices**		N/A
	Comply with IEC 61643-11		N/A
	External to controlgear and connected to earth:		N/A
	- only in fixed luminaires		N/A
	- only connected to protective earth		N/A

1.7 (11)	**CREEPAGE DISTANCES AND CLEARANCES**		N/A
1.7 (11.2.1)	Impulse withstand category (Normal category II)	Category II ☐ Category III ☐	—
	Category III according Annex U	SELV driver is certified and Uout is 54 V DC	N/A
	Protected against pollution, reduced creepage and clearance according Annex P of IEC 61347-1		N/A
1.7 (11.2.2)	Creepage distances for frequency up to 30 kHz	See Test Table 1.7 (11.2) I	N/A
	Creepage distances for frequency over 30 kHz:		N/A
	- Controlgear marked with $\hat{U}_{OUT}$ and f_{UOUT} according IEC 61347-1, clause 7.1, item w	See Test Table 1.7 (11.2) II	N/A

IEC 60598-2-1			
Clause	Requirement + Test	Result - Remark	Verdict
	- Requirements according IEC 60664-4 for controlgear not covered by IEC 61347	See Test Table 1.7 (11.2) II	N/A
1.7 (11.2.3)	Clearances for frequency up to 30 kHz	See Test Table 1.7 (11.2) I	N/A
	Clearances distances for frequency over 30 kHz:		N/A
	- Controlgear marked with U_P	See Test Table 1.7 (11.2) II	N/A
	- Requirements according IEC 60664-4 for controlgear not covered by IEC 61347	See Test Table 1.7 (11.2) II	N/A
1.8 (7)	**PROVISION FOR EARTHING**		N/A
1.8 (7.2.1 + 7.2.3)	Accessible metal parts		N/A
	Metal parts in contact with supporting surface		N/A
	Resistance < 0,5 Ω..... :		N/A
	Self-tapping screws used		N/A
	Thread-forming screws		N/A
	Thread-forming screw used in a grove		N/A
	Earth makes contact first		N/A
	Terminal blocks with integrated screwless earthing contacts tested according Annex V		N/A
	Protective earthing of the luminaire not via built-in control gear		N/A
1.8 (7.2.2 + 7.2.3)	Earth continuity in joints, etc.		N/A
1.8 (7.2.4)	Locking of clamping means		N/A
	Compliance with 4.7.3		N/A
	Terminal blocks with integrated screwless earthing contacts tested according Annex V		N/A
1.8 (7.2.5)	Earth terminal integral part of connector socket		N/A
1.8 (7.2.6)	Earth terminal adjacent to mains terminals		N/A
1.8 (7.2.7)	Electrolytic corrosion of the earth terminal		N/A
1.8 (7.2.8)	Material of earth terminal		N/A
	Contact surface bare metal		N/A
1.8 (7.2.10)	Class II luminaire for looping-in		N/A
	Double or reinforced insulation to functional earth		N/A
1.8 (7.2.11)	Earthing core coloured green-yellow		N/A
	Length of earth conductor		N/A

IEC 60598-2-1			
Clause	Requirement + Test	Result - Remark	Verdict

1.9 (14)	**SCREW TERMINALS**		N/A
	Separately approved; component list	(see Annex 1)	N/A
	Part of the luminaire	(see Annex 3)	N/A

1.9 (15)	**SCREWLESS TERMINALS AND ELECTRICAL CONNECTIONS**		N/A
	Separately approved; component list..... :	(see Annex 1)	N/A
	Part of the luminaire ..... :	(see Annex 4)	N/A

1.10 (5)	**EXTERNAL AND INTERNAL WIRING**		P
1.10 (5.2)	**Supply connection and external wiring**		**P**
1.10 (5.2.1)	Means of connection ..... :	Supply cord	P
	Outdoor luminaire has not PVC insulated external wiring if not class III or SELV ≤ 25 V a.c./60 V d.c. or protected from outdoor environment		N/A
1.10 (5.2.2)	Type of cable..... :	H03VVH2-F	P
	Nominal cross-sectional area (mm²) ..... :	2 x 0,75	P
	Cables equal to IEC 60227 or IEC 60245		P
1.10 (5.2.3)	Type of attachment, X, Y or Z	type X attachment	P
1.10 (5.2.5)	Type Z not connected to screws		N/A
1.10 (5.2.6)	Cable entries:		P
	- suitable for introduction		P
	- adequate degree of protection		P
1.10 (5.2.7)	Cable entries through rigid material have rounded edges		P
1.10 (5.2.8)	Insulating bushings:		N/A
	- suitably fixed		N/A
	- material in bushings		N/A
	- material not likely to deteriorate		N/A
	- tubes or guards made of insulating material		N/A
1.10 (5.2.9)	Locking of screwed bushings		N/A
1.10 (5.2.10)	Cord anchorage:		P
	- covering protected from abrasion		P
	- clear how to be effective		P
	- no mechanical or thermal stress		P
	- no tying of cables into knots etc.		P

IEC 60598-2-1			
Clause	Requirement + Test	Result - Remark	Verdict
	- insulating material or lining		N/A
1.10 (5.2.10.1)	Cord anchorage for type X attachment:		P
	a) at least one part fixed		P
	b) types of cable		P
	c) no damaging of the cable		P
	d) whole cable can be mounted		P
	e) no touching of clamping screws		P
	f) metal screw not directly on cable		P
	g) replacement without special tool		P
	Glands not used as anchorage		N/A
	Labyrinth type anchorages		N/A
1.10 (5.2.10.2)	Adequate cord anchorage for type Y and type Z attachment		N/A
1.10 (5.2.10.3)	Tests:		P
	- impossible to push cable; unsafe		P
	- pull test: 25 times; pull (N) ..... :	60 N on wire connecting LED module	P
	- torque test: torque (Nm) ..... :	0,15	P
	- displacement ≤ 2 mm		P
	- no movement of conductors		P
	- no damage of cable or cord		P
	- function independent of electrical connection		P
1.10 (5.2.11)	External wiring passing into luminaire		N/A
1.10 (5.2.12)	Looping-in terminals		N/A
1.10 (5.2.13)	Wire ends not tinned		N/A
	Wire ends tinned: no cold flow		P
1.10 (5.2.14)	Mains plug same protection		N/A
	Class III luminaire plug		N/A
	No unsafe compatibility		N/A
1.10 (5.2.16)	Appliance inlets (IEC 60320)		N/A
	Installation couplers (IEC 61535)		N/A

IEC 60598-2-1			
Clause	Requirement + Test	Result - Remark	Verdict
	Other appliance inlet or connector according relevant IEC standard		N/A
1.10 (5.2.17)	No standardized interconnecting cables properly assembled		N/A
1.10 (5.2.18)	Used plug in accordance with		N/A
	- IEC 60083		N/A
	- other standard		N/A
1.10 (5.3)	**Internal wiring**		**P**
1.10 (5.3.1)	Internal wiring of suitable size and type		P
	Through wiring		N/A
	- not delivered/ mounting instruction		N/A
	- factory assembled		N/A
	- socket outlet loaded (A) ..... :		N/A
	- temperatures ..... :	(see Annex 2)	N/A
	Green-yellow for earth only		N/A
1.10 (5.3.1.1)	Internal wiring connected directly to fixed wiring		N/A
	Cross-sectional area (mm²)..... :		N/A
	Insulation thickness (mm) ..... :		N/A
	Extra insulation added where necessary		N/A
1.10 (5.3.1.2)	Internal wiring connected to fixed wiring via internal current-limiting device		P
	Cross-sectional area (mm²)..... :	See annex 1	P
1.10 (5.3.1.3)	Double or reinforced insulation for class II		N/A
1.10 (5.3.1.4)	Conductors without insulation		N/A
1.10 (5.3.1.5)	SELV current-carrying parts		P
1.10 (5.3.1.6)	Insulation thickness other than PVC or rubber		N/A
1.10 (5.3.2)	Sharp edges etc.		P
	No moving parts of switches etc.		P
	Joints, raising/lowering devices		N/A
	Telescopic tubes etc.		N/A
	No twisting over 360°		N/A
1.10 (5.3.3)	Insulating bushings:		N/A

IEC 60598-2-1			
Clause	Requirement + Test	Result - Remark	Verdict
	- suitable fixed		N/A
	- material in bushings		N/A
	- material not likely to deteriorate		N/A
	- cables with protective sheath		N/A
1.10 (5.3.4)	Joints and junctions effectively insulated		N/A
1.10 (5.3.5)	Strain on internal wiring		P
1.10 (5.3.6)	Wire carriers		N/A
1.10 (5.3.7)	Wire ends not tinned		N/A
	Wire ends tinned: no cold flow		P
1.10 (5.4)	**Test to determine suitability of conductors having a reduced cross-sectional area**		N/A
	Under test the temperature of the luminaire wiring insulation not exceed the limits stated in Table 12.2	(see Annex 2)	N/A
	No damage to luminaire wiring after test		N/A

1.11 (8)	**PROTECTION AGAINST ELECTRIC SHOCK**		N/A
1.11 (8.2.1)	Live parts not accessible		N/A
	Basic insulated parts not used on the outer surface without appropriate protection		N/A
	Basic insulated parts not accessible with standard test finger on portable, settable and adjustable luminaires		N/A
	Basic insulated parts not accessible with Ø 50 mm probe from outside, other types of luminaires		N/A
	Lamp and starterholders in portable and adjustable luminaires comply with double or reinforced insulation requirements		N/A
	Basic insulation only accessible under lamp or starter replacement		N/A
	Protection in any position		N/A
	Double-ended tungsten filament lamp		N/A
	Insulation lacquer not reliable		N/A
	Double-ended high-pressure discharge lamp		N/A
	Relevant warning according to 3.2.18 fitted to the luminaire		N/A
1.11 (8.2.2)	Portable luminaire adjusted in most unfavourable position		N/A
1.11 (8.2.3.a)	Class II luminaire:		N/A

IEC 60598-2-1			
Clause	Requirement + Test	Result - Remark	Verdict
	- basic insulated metal parts not accessible during starter or lamp replacement		N/A
	- basic insulation not accessible other than during starter or lamp replacement		N/A
	- glass protective shields not used as supplementary insulation		N/A
1.11 (8.2.3.b)	BC lampholder of metal in class I luminaires shall be earthed		N/A
1.11 (8.2.3.c)	SELV circuits with exposed current carrying parts:		N/A
	Ordinary luminaire:		N/A
	- voltage under load (V)..... :		N/A
	- no-load voltage (V)..... :		N/A
	- touch current if applicable (mA) ..... :		N/A
	One conductive part insulated if required		N/A
	Other than ordinary luminaire:		N/A
	- nominal voltage (V) ..... :		N/A
	Class III luminaire only for connection to SELV		N/A
	Class III luminaire not provided with means for protective earthing		N/A
1.11 (8.2.4)	Portable luminaire has protection independent of supporting surface		N/A
1.11 (8.2.5)	Compliance with the standard test finger or relevant probe		N/A
1.11 (8.2.6)	Covers reliably secured		N/A
1.11 (8.2.7)	Luminaire other than below with capacitor > 0,5 μF not exceed 50 V 1 min after disconnection		N/A
	Portable luminaire with capacitor > 0,1 μF (0.25) not exceed 34 V 1 s after disconnection		N/A
	Other luminaires with capacitor > 0,1 μF (0.25) with plug and track adaptors not exceed 60 V 5 s after disconnection		N/A

1.12 (12)	**ENDURANCE TEST AND THERMAL TEST**		P
1.12 (-)	If IP > IP 20 relevant test of (12.4), (12.5) and (12.6) after (9.2) before (9.3) specified in 1.13		—
1.12 (12.2)	**Selection of lamps and ballasts**		—
	Lamp used according Annex B	(Lamp used see Annex 2)	—
	Controlgear if separate and not supplied	(Controlgear used see Annex 2)	—

IEC 60598-2-1			
Clause	Requirement + Test	Result - Remark	Verdict
1.12 (12.3)	**Endurance test**		**P**
	a) mounting-position ..... :	Normal mounting position	—
	b) test temperature (°C) ..... :	35	—
	c) total duration (h) ..... :	240	—
	d) supply voltage (V) ..... :	240 x1,1	—
	d) if not equipped with controlgear, constant voltage/current (V) or (A) ..... :		—
	e) luminaire ceases to operate		—
1.12 (12.3.2)	After endurance test:		P
	- no part unserviceable		P
	- luminaire not unsafe		P
	- no damage to track system		N/A
	- marking legible		P
	- no cracks, deformation etc.		P
1.12 (12.4)	**Thermal test (normal operation)**	(see Annex 2)	P
1.12 (12.5)	**Thermal test (abnormal operation)**	(see Annex 2)	P
1.12 (12.6)	**Thermal test (failed lamp control gear condition):**		N/A
1.12 (12.6.1)	Through wiring or looping-in wiring loaded by a current of (A) ..... :		—
	- case of abnormal conditions ..... :		—
	- electronic lamp control gear		N/A
	- measured winding temperature (°C): at 1,1 Un .... :		—
	- measured mounting surface temperature (°C) at 1,1 Un ..... :		N/A
	- calculated mounting surface temperature (°C) ..... :		N/A
	- track-mounted luminaires		N/A
1.12 (12.6.2)	Temperature sensing control		N/A
	- case of abnormal conditions ..... :		—
	- thermal link		N/A
	- manual reset cut-out		N/A
	- auto reset cut-out		N/A
	- measured mounting surface temperature (°C) ..... :		N/A
	- track-mounted luminaires		N/A
1.12 (12.7)	**Thermal test (failed lamp control gear in plastic luminaires):**		N/A

IEC 60598-2-1			
Clause	Requirement + Test	Result - Remark	Verdict
1.12 (12.7.1)	Luminaire without temperature sensing control		N/A
1.12 (12.7.1.1)	Luminaire with fluorescent lamp ≤ 70W		N/A
	Test method 12.7.1.1 or Annex W ..... :		—
	Test according to 12.7.1.1:		N/A
	- case of abnormal conditions ..... :		—
	- Ballast failure at supply voltage (V) ..... :		—
	- Components retained in place after the test		N/A
	- Test with standard test finger after the test		N/A
	Test according to Annex W:		N/A
	- case of abnormal conditions ..... :		—
	- measured winding temperature (°C): at 1,1 Un ..... :		—
	- measured temperature of fixing point/exposed part (°C): at 1,1 Un ..... :		—
	- calculated temperature of fixing point/exposed part (°C) ..... :		—
	Ball-pressure test .....:	See Test Table 1.15 (13.2.1)	N/A
1.12 (12.7.1.2)	Luminaire with discharge lamp, fluorescent lamp > 70W, transformer > 10 VA		N/A
	- case of abnormal conditions ..... :		—
	- measured winding temperature (°C): at 1,1 Un ..... :		—
	- measured temperature of fixing point/exposed part (°C): at 1,1 Un ..... :		—
	- calculated temperature of fixing point/exposed part (°C) ..... :		—
	Ball-pressure test ..... :	See Test Table 1.15 (13.2.1)	N/A
1.12 (12.7.1.3)	Luminaire with short circuit proof transformers ≤ 10 VA		N/A
	- case of abnormal conditions ..... :		—
	- Components retained in place after the test		N/A
	- Test with standard test finger after the test		N/A
1.12 (12.7.2)	Luminaire with temperature sensing control		N/A
	- thermal link..... :	Yes ☐ No ☐	—
	- manual reset cut-out ..... :	Yes ☐ No ☐	—
	- auto reset cut-out ..... :	Yes ☐ No ☐	—

IEC 60598-2-1			
Clause	Requirement + Test	Result - Remark	Verdict
	- case of abnormal conditions ..... :		—
	- highest measured temperature of fixing point/ exposed part (°C): ..... :		—
	Ball-pressure test: ..... :	See Test Table 1.15 (13.2.1)	N/A
1.13 (9)	**RESISTANCE TO DUST AND MOISTURE**		P
1.13 (-)	If IP > IP 20 the order of tests as specified in clause 1.12		N/A
1.13 (9.2)	Tests for ingress of dust, solid objects and moisture:		P
	- classification according to IP..... :	IP20	—
	- mounting position during test ..... :	Normal mounting position	—
	- fixing screws tightened; torque (Nm) ..... :	--	—
	- tests according to clauses..... :	9.2.0	—
	- electric strength test afterwards		P
	a) no deposit in dust-proof luminaire		N/A
	b) no talcum in dust-tight luminaire		N/A
	c) no trace of water on current-carrying parts or on insulation where it could become a hazard		N/A
	c.1) For luminaires without drain holes – no water entry		N/A
	c.2) For luminaires with drain holes – no hazardous water entry		N/A
	d) no water in watertight or pressure watertight luminaire		N/A
	e) no contact with live parts (IP 2X)		P
	e) no entry into enclosure (IP 3X and IP 4X)		N/A
	e) no contact with live parts through drain holes and ventilation slots (IP3X and IP4X)		N/A
	f) no trace of water on part of lamp requiring protection from splashing water		N/A
	g) no damage of protective shield or glass envelope		N/A
1.13 (9.3)	Humidity test 48 h		P
1.14 (10)	**INSULATION RESISTANCE AND ELECTRIC STRENGTH**		P
1.14 (10.2.1)	Insulation resistance test		P
	Cable or cord covered by metal foil or replaced by a metal rod of mm Ø ..... :		—
	Insulation resistance (MΩ) ..... :	See below	—

IEC 60598-2-1			
Clause	Requirement + Test	Result - Remark	Verdict
	SELV		P
	- between current-carrying parts of different polarity :		N/A
	- between current-carrying parts and mounting surface ..... :	500 MΩ	P
	- between current-carrying parts and metal parts of the luminaire ..... :	500 MΩ	P
	- between the outer surface of a flexible cord or cable where it is clamped in a cord anchorage and accessible metal parts ..... :		N/A
	- Insulation bushings as described in Section 5 ..... :		N/A
	Other than SELV		P
	- between live parts of different polarity ..... :		N/A
	- between live parts and mounting surface ..... :	500MΩ	P
	- between live parts and metal parts ..... :	500MΩ	P
	- between live parts of different polarity through action of a switch ..... :		N/A
	- between the outer surface of a flexible cord or cable where it is clamped in a cord anchorage and accessible metal parts ..... :		N/A
	- Insulation bushings as described in Section 5 ..... :		N/A
1.14 (10.2.2)	Electric strength test		P
	Dummy lamp		N/A
	Luminaires with ignitors after 24 h test		N/A
	Luminaires with manual ignitors		N/A
	Test voltage (V) ..... :	See below	P
	SELV		N/A
	- between current-carrying parts of different polarity :		N/A
	- between current-carrying parts and mounting surface ..... :	500 V	P
	- between current-carrying parts and metal parts of the luminaire ..... :	500 V	P
	- between the outer surface of a flexible cord or cable where it is clamped in a cord anchorage and accessible metal parts ..... :		N/A
	- Insulation bushings as described in Section 5 ..... :		N/A
	Other than SELV		P
	- between live parts of different polarity ..... :		N/A
	- between live parts and mounting surface ..... :	2960 V	P

IEC 60598-2-1			
Clause	Requirement + Test	Result - Remark	Verdict
	- between live parts and metal parts ..... :	2960 V	P
	- between live parts of different polarity through action of a switch..... :		N/A
	- between the outer surface of a flexible cord or cable where it is clamped in a cord anchorage and accessible metal parts..... :		N/A
	- Insulation bushings as described in Section 5 ..... :		N/A
1.14 (10.3)	Touch current or protective conductor current (mA).:	0,02	P
1.15 (13)	**RESISTANCE TO HEAT, FIRE AND TRACKING**		P
1.15 (13.2.1)	Ball-pressure test ..... :	See Test Table 1.15 (13.2.1)	P
1.15 (13.3.1)	Needle-flame test (10 s)..... :	See Test Table 1.15 (13.3.1)	P
1.15 (13.3.2)	Glow-wire test (650°C) ..... :	See Test Table 1.15 (13.3.2)	P
1.15 (13.4)	Proof tracking test (IEC 60112)..... :	See Test Table 1.15 (13.4)	N/A

IEC 60598-2-1			
Clause	Requirement + Test	Result - Remark	Verdict

1.7 (11.2)	**TABLE I: Creepage distances and clearances**							**N/A**
	Minimum distances (mm) for a.c. up to 30 kHz sinusoidal voltages							**N/A**
	Applicable part of IEC 60598-1 Table 11.1.A*, 11.1.B* and 11.2*							**N/A**
	Insulation type **	**Measured clearance**	**Required**		**Measured creepage**	**Required**		
			clearance	***Table**		**creepage**	***Table**	
Distance 1:								
Working voltage (V) .....:								—
PTI .....:					< 600 ☐	≥ 600 ☐		—
Pulse voltage or U_P if applicable (kV) .....:					--			—
Supplementary information: live part on LED driver to accessible part								
Distance 2:	R	>10	5.5	11.1.B	>10	7,2	11.1.A	
Working voltage (V) .....:								—
PTI .....:					< 600 ☒	≥ 600 ☐		—
Pulse voltage or U_P if applicable (kV) .....:					--			—
Supplementary information:								
Distance 3:								
Working voltage (V) .....:								—
PTI .....:					< 600 ☐	≥ 600 ☐		—
Pulse voltage or U_P if applicable (kV) .....:					--			—
Supplementary information:								

** Insulation type: B – Basic; S – Supplementary; R – Reinforced. See also IEC 60598-1 Annex M.

1.7 (11.2)	**TABLE II: Creepage distances and clearances**							**N/A**
Minimum distances (mm) for a.c. higher than 30 kHz sinusoidal voltages								
Applicable part of IEC 61347-1 Table 7 and 8* or IEC 60664-4 Table 1 and 2								
Distances	**Insulation type ****	**Measured clearance**	**Required**		**Measured creepage**	**Required**		
			clearance	***Table**		**creepage**	***Table**	
Distance 1:								
Working voltage (V) .....:								—
Frequency if applicable (kHz) .....:								—
PTI .....:					< 600 ☐	≥ 600 ☐		—
Peak value of the working voltage $\hat{U}_{out}$ if applicable (kV) .....:								—
Supplementary information:								

IEC 60598-2-1			
Clause	Requirement + Test	Result - Remark	Verdict

Distance 2:							
Working voltage (V) .....:							—
Frequency if applicable (kHz) .....:							—
PTI .....:	< 600 ☐ ≥ 600 ☐						—
Peak value of the working voltage $\hat{U}_{out}$ if applicable (kV) .....:							—
Supplementary information:							
Distance 3:							
Working voltage (V) .....:							—
Frequency if applicable (kHz) .....:							—
PTI .....:	< 600 ☐ ≥ 600 ☐						—
Peak value of the working voltage $\hat{U}_{out}$ if applicable (kV) .....:							—
Supplementary information:							

** Insulation type: B – Basic; S – Supplementary; R – Reinforced.

1.15 (13.2.1)	TABLE: Ball Pressure Test of Thermoplastics			P
Allowed impression diameter (mm) ..... :		2		—
Object/ Part No./ Material	Manufacturer/ trademark	Test temperature (°C)	Impression diameter (mm)	
PCB for LED module	see annex 1	125	0,4	
PCB for LED driver	see annex 1	125	0,6	
Bobbin	see annex 1	125	0,4	
Driver enclosure	see annex 1	75	0,8	
Supplementary information: --				

1.15 (13.3.1)	TABLE: Needle-flame test (IEC 60695-11-5)				P
Object/ Part No./ Material	Manufacturer/ trademark	Duration of application of test flame (ta); (s)	Ignition of specified layer Yes/No	Duration of burning (tb) (s)	Verdict
PCB for LED module	see annex 1	10	No	0	P
PCB for LED driver	see annex 1	10	No	0	P
Bobbin	see annex 1	10	No	0	P
Supplementary information: --					

IEC 60598-2-1			
Clause	Requirement + Test	Result - Remark	Verdict

1.15 (13.3.2)	TABLE: Glow-wire test (IEC 60695-2-11)			P
Glow wire temperature ..... :	650°C			—
Object/ Part No./ Material	Manufacturer/ trademark	Ignition of specified layer Yes/No	Duration of burning (tb) (s)	Verdict
PCB for LED module	see annex 1	NO	0	P
Light guide plate	see annex 1	NO	0	P
End cover	see annex 1	NO	0	P
Lamp diffuser	see annex 1	NO	0	P
Lens cover	see annex 1	NO	0	P
PCB for LED driver	see annex 1	NO	0	P
Bobbin	see annex 1	NO	0	P
Driver enclosure	see annex 1	NO	0	P
Supplementary information: --				

1.15 (13.4)	TABLE: Proof tracking test (IEC 60112)				N/A
Test voltage PTI ..... :	175 V				—
Object/ Part No./ Material	Manufacturer/ trademark	Withstand 50 drops without failure on three places or on three specimens			Verdict
Supplementary information:					

IEC 60598-2-1			
Clause	Requirement + Test	Result - Remark	Verdict

ANNEX 1	TABLE: Critical components information					P
Object / part No.	**Code**	**Manufacturer/ trademark**	**Type / model**	**Technical data**	**Standard**	**Mark(s) of conformity[1)]**
Supply cord	B	Zhongshan Luoka Electric Co., Ltd.	H03VV-F; H03VVH2-F	2 x 0,75 mm²	EN 50525-2-11	VDE 40034861
Supply cord (Alternative)	B	SHENZHEN CHAOJIE ELECTRONICS CO., LTD	H03VV-F; H03VVH2-F	2 x 0,75 mm²	EN 50525-2-11	VDE 40047214
Supply cord	A	Interchangeable	H03VV-F; H03VVH2-F	2 × 0,75 mm²	EN 50525-2-11	VDE
Description	Interchangeability based on specified dimensions due to mounting (including connections) and specified rating					
Wire connecting LED module	C	SHANGHAI XIANGYI ELECTRONIC EQUIPMENTS CO LTD	2464	20 AWG; 80 °C (UL/ E318342)	IEC/EN 60598-2-1	Tested in appliance
Wire connecting LED module	**C**	**SHENZHEN JIA YUN WIRE CO .,LTD**	**2464**	**20 AWG; 80 °C**	**IEC/EN 60598-2-1**	**Tested in appliance**
Wire connecting LED module	C	ZHEJIANG 3Q WIRE&CABLE CO LTD	2464	20 AWG; 80 °C (UL/E341104)	IEC/EN 60598-2-1	Tested in appliance
Wire connecting LED module	C	SHANGHAI ECHU WIRE&CABLE CO LTD	2464	20 AWG; 80 °C (UL/E312831)	IEC/EN 60598-2-1	Tested in appliance
Wire connecting LED module	A	Interchangeable	Interchangeable	20 AWG; 80 °C UL certified	IEC/EN 60598-2-1	Tested in appliance
Description	Interchangeability based on specified dimensions due to mounting (including connections) and specified rating					

IEC 60598-2-1			
Clause	Requirement + Test	Result - Remark	Verdict

LED driver	B	Shenzhen Tigi Digital Lighting Technology Co., Ltd.	TGPC-IH25-42-B1-0300	Input: 220-240V~;50/60Hz Output: 300mA; 30-42 Vdc Uout: 54 Vdc; tc 90 °C; SELV; Independent; Class II	IEC/EN 61347-1 IEC/EN 61347-2-13	TUV Mark R 50393645
LED driver	B	Shenzhen Tigi Digital Lighting Technology Co., Ltd.	TGPC-IH25-42-B1-0350	Input: 220-240V~;50/60Hz Output: 350mA; 30-42 Vdc Uout: 54 Vdc; tc 90 °C; SELV; Independent; Class II	IEC/EN 61347-1 IEC/EN 61347-2-13	TUV Mark R 50393645
LED driver	B	Shenzhen Tigi Digital Lighting Technology Co., Ltd.	TGPC-IH25-42-B1-0400	Input: 220-240V~;50/60Hz Output: 400mA; 30-42 Vdc Uout: 54 Vdc; tc 90 °C; SELV; Independent; Class II	IEC/EN 61347-1 IEC/EN 61347-2-13	TUV Mark R 50393645
LED driver	B	Shenzhen Tigi Digital Lighting Technology Co., Ltd.	TGPC-IH25-42-B1-0450	Input: 220-240V~;50/60Hz Output: 450mA; 30-42 Vdc Uout: 54 Vdc; tc 90 °C; SELV; Independent; Class II	IEC/EN 61347-1 IEC/EN 61347-2-13	TUV Mark R 50393645
LED driver	B	Shenzhen Tigi Digital Lighting Technology Co., Ltd.	TGPC-IH25-42-B1-0500	Input: 220-240V~;50/60Hz Output: 500mA; 30-42 Vdc Uout: 54 Vdc; tc 90 °C; SELV; Independent; Class II	IEC/EN 61347-1 IEC/EN 61347-2-13	TUV Mark R 50393645

IEC 60598-2-1			
Clause	Requirement + Test	Result - Remark	Verdict

LED driver	B	Shenzhen Tigi Digital Lighting Technology Co., Ltd.	TGPC-IH25-42-B1-0550	Input: 220-240V~;50/60Hz Output: 550mA; 30-42 Vdc Uout: 54 Vdc; tc 90 °C; SELV; Independent; Class II	IEC/EN 61347-1 IEC/EN 61347-2-13	TUV Mark R 50393645
LED driver	B	Shenzhen Tigi Digital Lighting Technology Co., Ltd.	TGPC-IH40-42-B1-0700	Input: 100-240V~;50/60Hz Output: 700mA; 30-42 Vdc Uout: 54 Vdc; tc 85 °C; SELV; Independent; Class II	IEC/EN 61347-1 IEC/EN 61347-2-13	DEKRA CB NL-54861
LED driver	B	Shenzhen Tigi Digital Lighting Technology Co., Ltd.	TGPC-IH40-42-B1-0750	Input: 100-240V~;50/60Hz Output: 750mA; 30-42 Vdc Uout: 54 Vdc; tc 85 °C; SELV; Independent; Class II	IEC/EN 61347-1 IEC/EN 61347-2-13	DEKRA CB NL-54861
LED driver	B	Shenzhen Tigi Digital Lighting Technology Co., Ltd.	TGPC-IH40-42-B1-0850	Input: 100-240V~;50/60Hz Output: 850mA; 30-42 Vdc Uout: 54 Vdc; tc 85 °C; SELV; Independent; Class II	IEC/EN 61347-1 IEC/EN 61347-2-13	DEKRA CB NL-54861
LED driver	B	Shenzhen Tigi Digital Lighting Technology Co., Ltd.	TGPC-IH40-42-B1-0950	Input: 100-240V~;50/60Hz Output: 950mA; 30-42 Vdc Uout: 54 Vdc; tc 85 °C; SELV; Independent; Class II	IEC/EN 61347-1 IEC/EN 61347-2-13	DEKRA CB NL-54861

IEC 60598-2-1			
Clause	Requirement + Test	Result - Remark	Verdict

LED driver	**B**	**Dongguan Boke LED driver Co., Ltd.**	**BK-PUL010A-0250Ad**	**Input: 200-240V~;50/60Hz Output: 250mA; 3-42 Vdc Uout: 50 Vdc; tc 85 °C; SELV; Independent; Class II**	**IEC/EN 61347-1 IEC/EN 61347-2-13**	**ENEC 25 Certified No. U6 180589086068**
LED driver	**B**	**Dongguan Boke LED driver Co., Ltd.**	**BK-PUL018A-0450Ad**	**Input: 200-240V~;50/60Hz Output: 450mA; 3-40 Vdc Uout: 50 Vdc; tc 85 °C; SELV; Independent; Class II**	**IEC/EN 61347-1 IEC/EN 61347-2-13**	**ENEC 25 Certified No. U6 180589086068**
LED driver	**B**	**Dongguan Boke LED driver Co., Ltd.**	**BK-PUL030A-0700Ad**	**Input: 200-240V~;50/60Hz Output: 700mA; 3-42 Vdc Uout: 50 Vdc; tc 85 °C; SELV; Independent; Class II**	**IEC/EN 61347-1 IEC/EN 61347-2-13**	**ENEC 25 Certified No. U6 180589086068**
LED driver	**B**	**Dongguan Boke LED driver Co., Ltd.**	**BK-PUL042A-1100Ad**	**Input: 200-240V~;50/60Hz Output: 1100mA; 3-38 Vdc Uout: 50 Vdc; tc 75 °C; SELV; Independent; Class II**	**IEC/EN 61347-1 IEC/EN 61347-2-13**	**ENEC 25 Certified No. U6 180389086056**
LED driver	**B**	**Dongguan Boke LED driver Co., Ltd.**	**BK-PUL060A-2000Ad**	**Input: 200-240V~;50/60Hz Output: 2000mA; 3-30 Vdc Uout: 50 Vdc; tc 80 °C; SELV; Independent; Class II**	**IEC/EN 61347-1 IEC/EN 61347-2-13**	**ENEC 25 Certified No. U6 180389086056**

IEC 60598-2-1			
Clause	Requirement + Test	Result - Remark	Verdict

LED driver	**B**	**Dongguan Boke LED driver Co., Ltd.**	**BK-BEL030-XXXX** **(XXXX=0100-0750)**	**Input: 200-240V~;50/60Hz Output: 100-750mA; 30-42 Vdc Uout: 60 Vdc;** **tc 80 °C; SELV; Independent; Class II**	**IEC/EN 61347-1 IEC/EN 61347-2-13**	**ENEC 25 Certified No. U6 0890860070**
LED driver	**B**	**Dongguan Boke LED driver Co., Ltd.**	**BK-BEL042-XXXX** **(XXXX=0800-1050)**	**Input: 200-240V~;50/60Hz Output: 800-1050mA; 30-42 Vdc Uout: 60 Vdc;** **tc 80 °C; SELV; Independent; Class II**	**IEC/EN 61347-1 IEC/EN 61347-2-13**	**ENEC 25 Certified No. U6 0890860070**
LED driver	**B**	**Dongguan Boke LED driver Co., Ltd.**	**BK-PLL022-XXXX** **(XXXX=0450-0750)**	**Input: 200-240V~;50/60Hz Output: 450-750mA; 27-42 Vdc Uout: 50 Vdc;** **tc 75 °C; SELV; Independent; Class II**	**IEC/EN 61347-1 IEC/EN 61347-2-13**	**ENEC 25 Certified No. U6 171289086050**
LED driver	**B**	**Dongguan Boke LED driver Co., Ltd.**	**BK-PLL040-XXXX** **(XXXX=0650-1000)**	**Input: 200-240V~;50/60Hz Output: 650-1000mA; 28-42 Vdc Uout: 50 Vdc;** **tc 75 °C; SELV; Independent; Class II**	**IEC/EN 61347-1 IEC/EN 61347-2-13**	**ENEC 25 Certified No. U6 171289086050**
LED driver	**B**	**Dongguan Boke LED driver Co., Ltd.**	**BK-PLL042-XXXX** **(XXXX=1050-1100)**	**Input: 200-240V~;50/60Hz Output: 1050-1100mA; 28-38 Vdc Uout: 48 Vdc;** **tc 85 °C; SELV; Independent; Class II**	**IEC/EN 61347-1 IEC/EN 61347-2-13**	**ENEC 25 Certified No. U6 171289086050**

IEC 60598-2-1			
Clause	Requirement + Test	Result - Remark	Verdict

LED driver	**B**	**Dongguan Boke LED driver Co., Ltd.**	**BK-PLL056-XXXX** **(XXXX=1150-1400)**	**Input: 200-240V~;50/60Hz Output: 1150-1400mA; 30-40 Vdc Uout: 50 Vdc; tc 85 °C; SELV; Independent; Class II**	**IEC/EN 61347-1 IEC/EN 61347-2-13**	**ENEC 25 Certified No. U6 171289086050**
LED driver	**B**	**Zhongshan Done Lighting Technology Co., Ltd.**	**DL-7W300-LEF**	**Input: 100-277V~;50/60Hz Output: 300mA; 15-24 Vdc Uout: 30 Vdc; tc 80 °C; SELV; Independent; Class II**	**IEC/EN 61347-1 IEC/EN 61347-2-13**	**TUV MARK Certified No. R50419193**
LED driver	**B**	**Zhongshan Done Lighting Technology Co., Ltd.**	**DL-12W300-LEF**	**Input: 100-277V~;50/60Hz Output: 300mA; 21-42 Vdc Uout: 48 Vdc; tc 80 °C; SELV; Independent; Class II**	**IEC/EN 61347-1 IEC/EN 61347-2-13**	**TUV MARK Certified No. R50409248**
LED driver	**B**	**Zhongshan Done Lighting Technology Co., Ltd.**	**DL-20W450-LEF**	**Input: 100-277V~;50/60Hz Output: 450mA; 21-42 Vdc Uout: 50 Vdc; tc 80 °C; SELV; Independent; Class II**	**IEC/EN 61347-1 IEC/EN 61347-2-13**	**TUV MARK Certified No. R50409913**
LED driver	**B**	**Zhongshan Done Lighting Technology Co., Ltd.**	**DL-30W600-LEF**	**Input: 100-277V~;50/60Hz Output: 600mA; 24-48 Vdc Uout: 57 Vdc; tc 80 °C; SELV; Independent; Class II**	**IEC/EN 61347-1 IEC/EN 61347-2-13**	**TUV MARK Certified No. R50409916**

IEC 60598-2-1			
Clause	Requirement + Test	Result - Remark	Verdict

LED driver	**B**	**Zhongshan Done Lighting Technology Co., Ltd.**	**DL-30W650-LEF**	**Input: 100-277V~;50/60Hz Output: 650mA; 24-48 Vdc Uout: 57 Vdc; tc 80 °C; SELV; Independent; Class II**	**IEC/EN 61347-1 IEC/EN 61347-2-13**	**TUV MARK Certified No. R50409916**
LED driver	**B**	**Zhongshan Done Lighting Technology Co., Ltd.**	**DL-30W700-LEF**	**Input: 100-277V~;50/60Hz Output: 700mA; 24-48 Vdc Uout: 57 Vdc; tc 80 °C; SELV; Independent; Class II**	**IEC/EN 61347-1 IEC/EN 61347-2-13**	**TUV MARK Certified No. R50409916**
LED driver	**B**	**Zhongshan Done Lighting Technology Co., Ltd.**	**DL-40W750-LEF**	**Input: 100-277V~;50/60Hz Output: 750mA; 24-48 Vdc Uout: 55 Vdc; tc 80 °C; SELV; Independent; Class II**	**IEC/EN 61347-1 IEC/EN 61347-2-13**	**TUV MARK Certified No. R50421386**
LED driver	**B**	**Zhongshan Done Lighting Technology Co., Ltd.**	**DL-40W800-LEF**	**Input: 100-277V~;50/60Hz Output: 800mA; 24-48 Vdc Uout: 55 Vdc; tc 80 °C; SELV; Independent; Class II**	**IEC/EN 61347-1 IEC/EN 61347-2-13**	**TUV MARK Certified No. R50421386**
LED driver	**B**	**Zhongshan Done Lighting Technology Co., Ltd.**	**DL-40W850-LEF**	**Input: 100-277V~;50/60Hz Output: 850mA; 24-48 Vdc Uout: 55 Vdc; tc 80 °C; SELV; Independent; Class II**	**IEC/EN 61347-1 IEC/EN 61347-2-13**	**TUV MARK Certified No. R50421386**

IEC 60598-2-1			
Clause	Requirement + Test	Result - Remark	Verdict

LED driver	**B**	**Zhongshan Done Lighting Technology Co., Ltd.**	**DL-40W900-LEF**	**Input: 100-277V~;50/60Hz Output: 900mA; 24-48 Vdc Uout: 55 Vdc; tc 80 °C; SELV; Independent; Class II**	**IEC/EN 61347-1 IEC/EN 61347-2-13**	**TUV MARK Certified No. R50421386**
LED driver	**B**	**Zhongshan Done Lighting Technology Co., Ltd.**	**DL-40W950-LEF**	**Input: 100-277V~;50/60Hz Output: 950mA; 21-42 Vdc Uout: 55 Vdc; tc 80 °C; SELV; Independent; Class II**	**IEC/EN 61347-1 IEC/EN 61347-2-13**	**TUV MARK Certified No. R50421386**
LED driver	**B**	**Zhongshan Done Lighting Technology Co., Ltd.**	**DL-40W1A0-LEF**	**Input: 100-277V~;50/60Hz Output: 1000mA; 21-42 Vdc Uout: 55 Vdc; tc 80 °C; SELV; Independent; Class II**	**IEC/EN 61347-1 IEC/EN 61347-2-13**	**TUV MARK Certified No. R50421386**
LED driver	**B**	**Zhongshan Done Lighting Technology Co., Ltd.**	**DL-40W1A05-LEF**	**Input: 100-277V~;50/60Hz Output: 1050mA; 21-42 Vdc Uout: 55 Vdc; tc 80 °C; SELV; Independent; Class II**	**IEC/EN 61347-1 IEC/EN 61347-2-13**	**TUV MARK Certified No. R50421386**
LED driver	**B**	**Zhongshan Done Lighting Technology Co., Ltd.**	**DL-50W1A1-LEF**	**Input: 100-277V~;50/60Hz Output: 1100mA; 21-42 Vdc Uout: 55 Vdc; tc 80 °C; SELV; Independent; Class II**	**IEC/EN 61347-1 IEC/EN 61347-2-13**	**TUV MARK Certified No. R50418813**
LED driver	**B**	**Zhongshan Done Lighting Technology Co., Ltd.**	**DL-50W1A15-LEF**	**Input: 100-277V~;50/60Hz Output: 1150mA; 21-42 Vdc Uout: 55 Vdc; tc 80 °C; SELV; Independent; Class II**	**IEC/EN 61347-1 IEC/EN 61347-2-13**	**TUV MARK Certified No. R50418813**

IEC 60598-2-1			
Clause	Requirement + Test	Result - Remark	Verdict

LED driver	**B**	**Zhongshan Done Lighting Technology Co., Ltd.**	**DL-50W1A2-LEF**	**Input: 100-277V~;50/60Hz Output: 1200mA; 21-42 Vdc Uout: 55 Vdc; tc 80 °C; SELV; Independent; Class II**	**IEC/EN 61347-1 IEC/EN 61347-2-13**	**TUV MARK Certified No. R50418813**
LED driver	**B**	**Tridonic GmbH & Co KG**	**LC 21/500/42 fixC SR ADV2**	**Input: 220-240V~;50/60Hz Output: 500mA Uout: 60 Vdc; tc 80 °C; SELV; Independent; Class II**	**IEC/EN 61347-1 IEC/EN 61347-2-13**	**ENEC 11 Certified No. 7590-249**
LED driver	**B**	**Tridonic GmbH & Co KG**	**LC 25/600/42 fixC SR ADV2**	**Input: 220-240V~;50/60Hz Output: 600mA Uout: 60 Vdc; tc 65 °C; SELV; Independent; Class II**	**IEC/EN 61347-1 IEC/EN 61347-2-13**	**ENEC 11 Certified No. 7590-249**
LED driver	**B**	**Tridonic GmbH & Co KG**	**LC 30/700/42 fixC SR ADV2**	**Input: 220-240V~;50/60Hz Output: 700mA Uout: 60 Vdc; tc 65 °C; SELV; Independent; Class II**	**IEC/EN 61347-1 IEC/EN 61347-2-13**	**ENEC 11 Certified No. 7590-249**
LED driver	**B**	**Tridonic GmbH & Co KG**	**LC 35/800/44 fixC SR ADV2**	**Input: 220-240V~;50/60Hz Output: 800mA Uout: 60 Vdc; tc 70 °C; SELV; Independent; Class II**	**IEC/EN 61347-1 IEC/EN 61347-2-13**	**ENEC 11 Certified No. 7590-249**
LED driver	**B**	**Tridonic GmbH & Co KG**	**LC 38/900/42 fixC SR ADV2**	**Input: 220-240V~;50/60Hz Output: 900mA Uout: 60 Vdc; tc 70 °C; SELV; Independent; Class II**	**IEC/EN 61347-1 IEC/EN 61347-2-13**	**ENEC 11 Certified No. 7590-249**

IEC 60598-2-1			
Clause	Requirement + Test	Result - Remark	Verdict

LED driver	**B**	**Tridonic GmbH & Co KG**	**LC 44/1050/42 fixC SR ADV2**	**Input: 220-240V~;50/60Hz Output: 1050mA Uout: 60 Vdc; tc 80 °C; SELV; Independent; Class II**	**IEC/EN 61347-1 IEC/EN 61347-2-13**	**ENEC 11 Certified No. 7590-249**
LED	C	HONGLI TRONIC	2835	2,8-3,4 V; 60-150mA	IEC/EN 62031	Tested in appliance
LED	C	HONGLI TRONIC	4014	2,8-3,4 V; 60-150mA	IEC/EN 62031	Tested in appliance
LED	C	Bridgelux Inc.	2835	2,8-3,4 V; 60-150mA	IEC/EN 62031	Tested in appliance
LED	C	Bridgelux Inc.	4014	2,8-3,4 V; 60-150mA	IEC/EN 62031	Tested in appliance
LED	**C**	**SHENZHEN JUFEIOPTO ELECTRONICSCO.,LTD**	**2835**	**2,8-3,4 V; 60-150mA**	**IEC/EN 62031**	**Tested in appliance**
LED	**C**	**ShenZhen Runlite Technology Co.,Ltd**	**2835**	**2,8-3,4 V; 60-150mA**	**IEC/EN 62031**	**Tested in appliance**
LED	**C**	**SHENZHEN JUFEIOPTO ELECTRONICSCO.,LTD**	**4014**	**2,8-3,4 V; 60-150mA**	**IEC/EN 62031**	**Tested in appliance**
LED	**C**	**ShenZhen Runlite Technology Co.,Ltd**	**4014**	**2,8-3,4 V; 60-150mA**	**IEC/EN 62031**	**Tested in appliance**
PCB for LED module	C	Guangde Dongfeng Electronics Co.,Ltd	DF-LV	V-0; 90°C (UL/E199900)	IEC/EN 60598-2-1	Tested in appliance
PCB for LED module (Alternative)	C	Guangde Dongfeng Electronics Co.,Ltd	DF-2H	V-0; 130°C (UL/E199900)	IEC/EN 60598-2-1	Tested in appliance
PCB for LED module (Alternative)	C	JIANGSU DIFEIDA ELECTRONICS CO LTD	LS-5M	V-0; 90°C (UL/E176891)	IEC/EN 60598-2-1	Tested in appliance
PCB for LED module (Alternative)	C	Hubei zhongpei electronic technology co. LTD	ZP-1	V-0; 90°C (UL/E481795)	IEC/EN 60598-2-1	Tested in appliance

IEC 60598-2-1			
Clause	Requirement + Test	Result - Remark	Verdict

PCB for LED module (Alternative)	C	Hubei zhongpei electronic technology co. LTD	ZP-2	V-0; 130°C (UL/E481795)	IEC/EN 60598-2-1	Tested in appliance
PCB for LED module (Alternative)	C	GROWZING (HUIZHOU) ElECTRONI CS CO LTD	L-F	V-0;105°C (UL/E310296)	IEC/EN 60598-2-1	Tested in appliance
PCB for LED module (Alternative)	**C**	**Kunshan YIMAIGE Electronics Co., Ltd**	**--**	**V-0; 130°C**	**IEC/EN 60598-2-1**	**Tested in appliance**
PCB for LED module (Alternative)	**C**	**SUZHOU XIN KE Electronics Technology Co.,Ltd**	**--**	**V-0; 130°C**	**IEC/EN 60598-2-1**	**Tested in appliance**
Switch	B	Zhejiang Jialong	SS-23	250 V; 3A	IEC/EN 61058	TUV MARK Certified No. R50331228
Light guide plate	C	Suzhou Glamor Miles Opto-electronic Co.,Ltd.	--	PMMA	IEC/EN 60598-2-1	Tested in appliance
Light guide plate (alternative)	**C**	**Suzhou Carp Optical Mstar Technology Co., Ltd.**	**--**	**PMMA**	**IEC/EN 60598-2-1**	**Tested in appliance**
Light guide plate (alternative)	**C**	**Talant Optronics(suzhou)CO.LTD**	**--**	**PMMA**	**IEC/EN 60598-2-1**	**Tested in appliance**
Light guide plate (alternative)	**C**	**INC TAI TRADING CO., LTD**	**--**	**MS/PS**	**IEC/EN 60598-2-1**	**Tested in appliance**
End cover	C	Ningbo City Xusheng Plastic Electric Co .,Ltd.	--	ABS	IEC/EN 60598-2-1	Tested in appliance
Lamp diffuser	C	Jiaxing Chuangjie Electronic Technology Co.,LTD	--	PS	IEC/EN 60598-2-1	Tested in appliance

IEC 60598-2-1			
Clause	Requirement + Test	Result - Remark	Verdict

Lamp diffuser (alternative)	**C**	**Shenzhen Qunisland Lighting Technology Co,.Ltd**	**--**	**PS/PC-TPA/TPB**	**IEC/EN 60598-2-1**	**Tested in appliance**
Lamp diffuser (alternative)	**C**	**BlumiTekElectronic(Shanghai) Co.,Ltd**	**--**	**PS/PC-TPA/TPB**	**IEC/EN 60598-2-1**	**Tested in appliance**
Lamp diffuser (alternative)	**C**	**PingHu JiZhan Plastic Technology Co., Ltd.**	**--**	**PS/PC-TPA/TPB**	**IEC/EN 60598-2-1**	**Tested in appliance**
Lamp diffuser (alternative)	**C**	**ZHONGSHANJIANKUN OPTICALMATERIALSCO.LTD**	**--**	**PS/PC-TPA/TPB**	**IEC/EN 60598-2-1**	**Tested in appliance**
Lamp diffuser (alternative)	**C**	**Jiangxi shenghui optical technoloy & Innovation co.,Ltd**	**--**	**PS/PC-TPA/TPB**	**IEC/EN 60598-2-1**	**Tested in appliance**
Lens cover	C	Ningbo yinzhou xusheng plastic electrical appliances co. Ltd	--	PC	IEC/EN 60598-2-1	Tested in appliance
Components for LED driver LD series						
LED driver	**C**	**LUMLUX**	**LDaaaBCbbbW89ADA002** **(aaa=005-042;** **bbb=010-100)**	**Input:220-240V~; 50/60Hz** **Output: 100-1000mA; 26-38 Vdc** **Uout: 48 Vdc;** **tc 85 °C; SELV; Independent; Class II**	**IEC/EN 61347-1** **IEC/EN 61347-2-13**	**Tested in appliance**
Driver enclosure	**C**	**ZHEN JIANG CHI MEI CHEMICAL CO LTD**	**--**	**PC+ABS (UL/E194560)**	**IEC/EN 61347-1** **IEC/EN 61347-2-13**	**Tested in appliance**
Driver enclosure (Alternative)	**C**	**POLYROCKS CHEMICAL CO LTD**	**1001(+)(f2)**	**PC**	**IEC/EN 61347-1, IEC/EN 61347-2-13**	**Tested in appliance**

IEC 60598-2-1			
Clause	Requirement + Test	Result - Remark	Verdict

Terminal block	**B**	**Degson Electronics Co. Ltd.**	**DG300-5.0**	**250 V; 24A; 1,0-2,5mm^2**	**EN 60998-1; EN 60998-2-1**	**VDE (40022125)**
Terminal block (Alternative)	**B**	**Degson Electronics Co. Ltd.**	**DG126-5.0**	**250 V; 110 °C; Max 2,5 mm^2**	**EN 60998-1; EN 60998-2-1**	**VDE (40024856)**
Terminal block (Alternative)	**B**	**Dongguan Changhe Electronics Co.,Ltd.**	**CA350-04-500**	**250 V; 110 °C; Max 2,5 mm^2**	**EN 60998-1; EN 60998-2-1**	**VDE (40021481)**
PCB	**C**	**JIANGSU GLOBAL SUCCESS CIRCUITS CO.,LTD. （Spare）**	**FR-4**	**V-0; 130 °C**	**IEC/EN 61347-1 IEC/EN 61347-2-13**	**Tested in appliance**
PCB (Alternative)	**C**	**FOSHAN MINGKUN ELECTRICAL CO.,LTD. （Spare）**	**FR-4**	**V-0; 130 °C**	**IEC/EN 61347-1 IEC/EN 61347-2-13**	**Tested in appliance**
PCB (Alternative)	**C**	**SHENZHEN HUAJIEXIN CIRCUITS CO.,LTD. （Spare）**	**FR-4**	**V-0; 130 °C**	**IEC/EN 61347-1 IEC/EN 61347-2-13**	**Tested in appliance**
PCB (Alternative)	**C**	**SHENZHEN TRISON TECHNOLOGY LIMITED CORPORATION**	**FR-4**	**V-0; 130 °C**	**IEC/EN 61347-1 IEC/EN 61347-2-13**	**Tested in appliance**
PCB (Alternative)	**C**	**SICHUAN HAIYING ELECTRONIC TECHNOLOGY CO LTD**	**FR-4**	**V-0; 130 °C**	**IEC/EN 61347-1 IEC/EN 61347-2-13**	**Tested in appliance**
PCB (Alternative)	**C**	**DONG GUAN RONG MAO ELECTRONICS CO LTD**	**FR-4**	**V-0; 130 °C**	**IEC/EN 61347-1 IEC/EN 61347-2-13**	**Tested in appliance**
Fuse resistor	**C**	**ANHUI CHANGSHENG ELECTRONICS CO.,LTD**	**RXF21-1W**	**2,2 Ω; 1W**	**IEC/EN 61347-1 IEC/EN 61347-2-13**	**Tested in appliance**
Fuse resistor (Alternative)	**C**	**CAIZHI ELECTRONICS (SUZHOU) CO,LTD**	**RXF21-1W**	**2,2 Ω; 1W**	**IEC/EN 61347-1 IEC/EN 61347-2-13**	**Tested in appliance**

IEC 60598-2-1			
Clause	Requirement + Test	Result - Remark	Verdict

X capacitor	**B**	**XIAMEN FARATRONIC CO.,LTD.**	**MKP62**	**305 V~, 0,22 uF; 110 °C**	**IEC/EN 60384-14**	**VDE (40000358)**
X capacitor (Alternative)	**B**	**Sichuan Zhongxing Electronic Co.,Ltd**	**MKP61**	**305 V~, 0,22 uF; 110 °C**	**IEC/EN 60384-14**	**VDE (40032626)**
X capacitor (Alternative)	**B**	**YANGZHOU NISSEI ELECTRONICS CO.,LTD.**	**MP1**	**310 V~, 0,22 uF; 110 °C**	**IEC/EN 60384-14**	**VDE (40041628)**
X capacitor (Alternative)	**B**	**Zhejiang Qixing Electronice Corp.,Ltd.**	**MKPX2**	**305 V~, 0,22 uF; 110 °C**	**IEC/EN 60384-14**	**VDE (40049209)**
Y capacitor	**B**	**TDK XIAMEN CO.,LTD.**	**CD**	**Y1; 1000pF; 400V; 125 °C**	**IEC/EN 60384-14**	**VDE (40017931)**
Y capacitor (Alternative)	**B**	**success electronics (SEC)**	**SE**	**Y1; 1000pF; 500V; 125 °C**	**IEC/EN 60384-14**	**VDE (40020002)**
Y capacitor (Alternative)	**B**	**JYH HSU(JEC) ELECTRONICS LTD**	**JD**	**Y1; 1000pF; 400V; 125 °C**	**IEC/EN 60384-14**	**VDE (40038642)**
Magnet wire	**C**	**DONG GUAN YIDA INDUSTRIAL CO LTD**	**xUEW/155, QA-x/155**	**155 °C (UL/E344055)**	**IEC/EN 61347-1; IEC/EN 61347-2-13**	**Tested in appliance**
Magnet wire (Alternative)	**C**	**TAI-I ELECTRIC WIRE & CABLE CO LTD**	**2UEW**	**130 °C (UL/E85640)**	**IEC/EN 61347-1; IEC/EN 61347-2-13**	**Tested in appliance**
Magnet wire (Alternative)	**C**	**Wan Jia Special Wire**	**UEWB**	**130 °C (UL/E317291)**	**IEC/EN 61347-1; IEC/EN 61347-2-13**	**Tested in appliance**
Magnet wire (Alternative)	**C**	**TONGLING NONFERROUS COPPER CROWN ELECTRICAL CO LTD**	**UEW**	**130 °C (UL/E217937)**	**IEC/EN 61347-1; IEC/EN 61347-2-13**	**Tested in appliance**
Triple insulation wire	**B**	**Suzhou Yusheng Electronic Co.,Ltd.**	**TIW-B**	**130 °C; reinforced insulation**	**IEC/EN IEC 62368-1**	**VDE (40033527)**
Triple insulation wire (Alternative)	**C**	**FURUKAWA ELECTRIC CO LTD**	**TEX-E**	**130 °C; reinforced insulation (UL/E206440)**	**IEC/EN 61347-1; IEC/EN 61347-2-13**	**Tested in appliance**

IEC 60598-2-1			
Clause	Requirement + Test	Result - Remark	Verdict

Triple insulation wire (Alternative)	**C**	**SHANGHAI LUCKY TRADE CO LTD**	**TIW-B**	**130 °C; reinforced insulation (UL/E305883)**	**IEC/EN 61347-1; IEC/EN 61347-2-13**	**Tested in appliance**
Insulation tape	**C**	**SUZHOU MAILADUO NA ELECTRIC MATERIAL CO LTD**	**JY312#**	**130 °C (UL/E188295)**	**IEC/EN 61347-1; IEC/EN 61347-2-13**	**Tested in appliance**
Insulation tape (Alternative)	**C**	**JINGJIANG YAHUA PRESSURE SENSITIVE GLUE CO LTD**	**CT-280B; PZ**	**130 °C (UL/E165111)**	**IEC/EN 61347-1; IEC/EN 61347-2-13**	**Tested in appliance**
Tube	**C**	**DONGGUAN LING FREE HARDWARE PLASTICS PRODUCT CO LTD**	**LING FREE PTFE TUBE**	**600 V; 200 °C (UL/E352366)**	**IEC/EN 61347-1; IEC/EN 61347-2-13**	**Tested in appliance**
Tube (Alternative)	**C**	**CHANGYUAN ELECTRONICS GROUP CO LTD**	**CB-TT-L**	**200 °C (UL/E180908)**	**IEC/EN 61347-1; IEC/EN 61347-2-13**	**Tested in appliance**
Bobbin	**C**	**CHANG CHUN CHEMICAL (ZHANGZHOU) CO LTD**	**T375J**	**V-0; 150 °C (UL/E304813)**	**IEC/EN 61347-1; IEC/EN 61347-2-13**	**Tested with appliance**
Bobbin (Alternative)	**C**	**CHANG CHUN PLASTICS CO LTD**	**T375J**	**V-0; 150 °C (UL/E59481)**	**IEC/EN 61347-1; IEC/EN 61347-2-13**	**Tested with appliance**
Bobbin (Alternative)	**C**	**SUMITOMO BAKELITE CO LTD**	**PM-9820**	**V-0; 150 °C (UL/E209189)**	**IEC/EN 61347-1; IEC/EN 61347-2-13**	**Tested with appliance**
Components for LED driver BK-PPL042 series						
LED driver	**C**	**BOKE**	**BK-PPL042-xxxx** **(xxxx=0600-1000)**	**Input:200-240V~; 50/60Hz** **Output: 600-1000mA; 28-42 Vdc** **Uout: 48 Vdc;** **tc 85 °C; SELV; Independent;** **Class II;IP65**	**IEC/EN 61347-1 IEC/EN 61347-2-13**	**Tested in appliance**

IEC 60598-2-1			
Clause	Requirement + Test	Result - Remark	Verdict

Driver enclosure	**C**	**ZHEN JIANG CHI MEI CHEMICAL CO LTD**	**--**	**PC+ABS (UL/E194560)**	**IEC/EN 61347-1 IEC/EN 61347-2-13**	**Tested in appliance**
Driver enclosure (Alternative)	**C**	**POLYROCKS CHEMICAL CO LTD**	**1001(+)(f2)**	**PC**	**IEC/EN 61347-1, IEC/EN 61347-2-13**	**Tested in appliance**
PCB	**C**	**JIANGSU GLOBAL SUCCESS CIRCUITS CO.,LTD. （Spare）**	**FR-4**	**V-0; 130 °C**	**IEC/EN 61347-1 IEC/EN 61347-2-13**	**Tested in appliance**
PCB (Alternative)	**C**	**FOSHAN MINGKUN ELECTRICAL CO.,LTD. （Spare）**	**FR-4**	**V-0; 130 °C**	**IEC/EN 61347-1 IEC/EN 61347-2-13**	**Tested in appliance**
PCB (Alternative)	**C**	**SHENZHEN HUAJIEXIN CIRCUITS CO.,LTD. （Spare）**	**FR-4**	**V-0; 130 °C**	**IEC/EN 61347-1 IEC/EN 61347-2-13**	**Tested in appliance**
PCB (Alternative)	**C**	**SHENZHEN TRISON TECHNOLOGY LIMITED CORPORATION**	**FR-4**	**V-0; 130 °C**	**IEC/EN 61347-1 IEC/EN 61347-2-13**	**Tested in appliance**
PCB (Alternative)	**C**	**SICHUAN HAIYING ELECTRONIC TECHNOLOGY CO LTD**	**FR-4**	**V-0; 130 °C**	**IEC/EN 61347-1 IEC/EN 61347-2-13**	**Tested in appliance**
PCB (Alternative)	**C**	**DONG GUAN RONG MAO ELECTRONICS CO LTD**	**FR-4**	**V-0; 130 °C**	**IEC/EN 61347-1 IEC/EN 61347-2-13**	**Tested in appliance**
Input wire	**B**	**Ningbo chaoyu Electric Appliance Co., Ltd**	**H05VV-F**	**2X0,75 mm²**	**EN 50525**	**VDE**
Output wire	**C**	**SHENZHEN CHAOJIE ELECTRONICS CO LTD**	**2464**	**20 AWG; 300V; 80 °C (UL/E484929)**	**IEC/EN 61347-1 IEC/EN 61347-2-13**	**Tested in appliance**

IEC 60598-2-1			
Clause	Requirement + Test	Result - Remark	Verdict

Fuse	**B**	**XC Electronics (Shen Zhen) Corp. Ltd.**	**5TE**	**250 V; 2 A**	**IEC/EN 60127**	**VDE 40036821**
Fuse (Alternative)	**B**	**Shenzhen Lanson Electronics Co. Ltd.**	**SMT**	**250 V; 2 A**	**IEC/EN 60127**	**VDE 40012592**
Fuse (Alternative)	**B**	**Shenzhen Lanson Electronics Co. Ltd.**	**3K**	**250 V; 2 A**	**IEC/EN 60127**	**VDE 40010682**
Fuse (Alternative)	**B**	**Dongguan Better Electronics Technology Co., Ltd.**	**932**	**250 V; 2 A**	**IEC/EN 60127**	**VDE 40033369**
Fuse (Alternative)	**B**	**Dongguan Better Electronics Technology Co., Ltd.**	**334**	**250 V; 2 A**	**IEC/EN 60127**	**VDE 40025428**
Varistor	**B**	**Thinking Electronic Industrial Co., Ltd.**	**TVR07561 TVR07511**	**Min 300V; Min 85 °C**	**IEC/EN 61051**	**VDE 005944**
Varistor (Alternative)	**B**	**Shantou High-New Technology Dev. Zone Songtian Enterprise Co., Ltd.**	**7D561K; 7D511K**	**Min 300V; Min 85 °C**	**IEC/EN 61051**	**VDE 40023049**
Varistor (Alternative)	**B**	**Hongzhi Enterprises Ltd.**	**HEL7D561K; HEL7D511K**	**Min 300V; Min 85 °C**	**IEC/EN 61051**	**VDE 40037512**
X capacitor	**B**	**Shenzhen Su Rong Capacitors Co., Ltd.**	**MPX; MKP**	**Min 250 V~, 0,1 uF; 110 °C; X2**	**IEC/EN 60384-14**	**VDE 40008924**
X capacitor (Alternative)	**B**	**Shantou High-New Technology Dev. Zone Songtian Enterprise Co., Ltd.**	**MPX**	**Min 250 V~, 0,1 uF; 110 °C; X2**	**IEC/EN 60384-14**	**VDE 40034679**
X capacitor (Alternative)	**B**	**Shenzhen Sincerity Technology Co., Ltd.**	**MPX; MKP**	**Min 250 V~, 0,1 uF; 110 °C; X2**	**IEC/EN 60384-14**	**VDE 40028812**

IEC 60598-2-1			
Clause	Requirement + Test	Result - Remark	Verdict

X capacitor (Alternative)	**B**	**Shenzhen Chuangshuoda Electronics Co., Ltd.**	**MPX**	**Min 250 V~, 0,1 uF; 110 °C; X2**	**IEC/EN 60384-14**	**VDE 40037763**
Y capacitor	**B**	**Shantou High-New Technology Dev. Zone Songtian Enterprise Co., Ltd.**	**CD**	**Y1; 2200pF; 250V; 125 °C**	**IEC/EN 60384-14**	**VDE 40025754**
Y capacitor (Alternative)	**B**	**Xiamen Wanming Electronics Co., Ltd.**	**HJ**	**Y1; 2200pF; 250V; 125 °C**	**IEC/EN 60384-14**	**VDE 40000353**
Y capacitor (Alternative)	**B**	**Walsin Technology Corp.**	**AH**	**Y1; 2200pF; 250V; 125 °C**	**IEC/EN 60384-14**	**VDE 40001804**
Y capacitor (Alternative)	**B**	**Guangdong South Hongming Electronic Science and Technology Co., Ltd.**	**F**	**Y1; 2200pF; 250V; 125 °C**	**IEC/EN 60384-14**	**VDE 40036246**
Magnet wire	**C**	**TAI-I ELECTRIC WIRE & CABLE CO LTD**	**2UEW**	**130 °C (UL/E85640)**	**IEC/EN 61347-1; IEC/EN 61347-2-13**	**Tested in appliance**
Magnet wire (Alternative)	**C**	**Wan Jia Special Wire**	**UEWB**	**130 °C (UL/E317291)**	**IEC/EN 61347-1; IEC/EN 61347-2-13**	**Tested in appliance**
Magnet wire (Alternative)	**C**	**TONGLING NONFERROUS COPPER CROWN ELECTRICAL CO LTD**	**UEW**	**130 °C (UL/E217937)**	**IEC/EN 61347-1; IEC/EN 61347-2-13**	**Tested in appliance**
Triple insulation wire	**C**	**FURUKAWA ELECTRIC CO LTD**	**TEX-E**	**130 °C; reinforced insulation (UL/E206440)**	**IEC/EN 61347-1; IEC/EN 61347-2-13**	**Tested in appliance**
Triple insulation wire (Alternative)	**C**	**SHANGHAI LUCKY TRADE CO LTD**	**TIW-B**	**130 °C; reinforced insulation (UL/E305883)**	**IEC/EN 61347-1; IEC/EN 61347-2-13**	**Tested in appliance**

IEC 60598-2-1			
Clause	Requirement + Test	Result - Remark	Verdict

Insulation tape	**C**	**SUZHOU MAILADUO NA ELECTRIC MATERIAL CO LTD**	**JY312#**	**130 °C (UL/E188295)**	**IEC/EN 61347-1; IEC/EN 61347-2-13**	**Tested in appliance**
Insulation tape (Alternative)	**C**	**JINGJIANG YAHUA PRESSURE SENSITIVE GLUE CO LTD**	**CT-280B; PZ**	**130 °C (UL/E165111)**	**IEC/EN 61347-1; IEC/EN 61347-2-13**	**Tested in appliance**
Tube	**C**	**CHANGYUAN ELECTRONICS GROUP CO LTD**	**CB-TT-L**	**200 °C (UL/E180908)**	**IEC/EN 61347-1; IEC/EN 61347-2-13**	**Tested in appliance**
Varnish	**C**	**HANG CHEUNG COATINGS (HUIYANG) LTD**	**8562**	**155 °C (UL/E200154)**	**IEC/EN 61347-1; IEC/EN 61347-2-13**	**Tested in appliance**
Bobbin	**C**	**CHANG CHUN PLASTICS CO LTD**	**T375J**	**V-0; 150 °C (UL/E59481)**	**IEC/EN 61347-1; IEC/EN 61347-2-13**	**Tested with appliance**
Bobbin (Alternative)	**C**	**SUMITOMO BAKELITE CO LTD**	**PM-9820**	**V-0; 150 °C (UL/E209189)**	**IEC/EN 61347-1; IEC/EN 61347-2-13**	**Tested with appliance**

Supplementary information:

[1)] Provided evidence ensures the agreed level of compliance. See OD-CB2039.

The codes above have the following meaning:

A - The component is replaceable with another one, also certified, with equivalent characteristics

B - The component is replaceable if authorised by the test house

C - Integrated component tested together with the appliance

D - Alternative component

IEC 60598-2-1			
Clause	Requirement + Test	Result - Remark	Verdict

ANNEX 2	TABLE: Thermal tests of Section 12		P
	Type reference ..... :	BM-TPL24040	—
	Lamp used..... :	As delivered	—
	Lamp control gear used..... :	TGPC-IH40-42-B1-0950	—
	Mounting position of luminaire ..... :	Normal mounting position	—
	Supply wattage (W) ..... :	40	—
	Supply current (A) ..... :	0,189	—
	Temperatures in test 1 - 4 below are corrected for ta (°C) ..... :	25	—
	- abnormal operating mode ..... :	Short-circuited of output of driver, light shut down	—
1.12 (12.4)	- test 1: rated voltage ..... :	240	—
	- test 2: 1,06 times rated voltage or 1,05 times rated wattage or 1,1 times constant voltage/current ..... :	240 x 1,06	—
	- test 3: Load on wiring to socket-outlet, 1,06 times voltage or 1,05 times wattage ..... :	--	—
	Through wiring or looping-in wiring loaded by a current of A during the test ..... :	--	—
1.12 (12.5)	- test 4: 1,1 times rated voltage or 1,05 times rated wattage or 1,1 times constant voltage/current ..... :	--	—

Temperature measurements (°C)

Part	Ambient	Cl. 12.4 – normal				Cl. 12.5 – abnormal	
		test 1	test 2	test 3	limit	test 4	limit
Supply cord	25	--	26,3	--	75	--	--
Tc on driver	25	60	--	--	85	--	--
Output wire	25	--	27,2	--	80	--	--
End cap	25	--	26,8	--	90	--	--
Light guide plate	25	--	26,2	--	90	--	--
PCB for LED module	25	--	29,1	--	90	--	--
Mounting surface	25	--	28,0	--	90	--	--
Supplementary information: --							

IEC 60598-2-1			
Clause	Requirement + Test	Result - Remark	Verdict

ANNEX 2	TABLE: Thermal tests of Section 12		P
	Type reference ..... :	BM-PL25080	—
	Lamp used..... :	As delivered	—
	Lamp control gear used..... :	2x LC 44/1050/42 fixC SR ADV2	—
	Mounting position of luminaire ..... :	Normal mounting position	—
	Supply wattage (W) ..... :	79,3	—
	Supply current (A) ..... :	0,337	—
	Temperatures in test 1 - 4 below are corrected for ta (°C) ..... :	25	—
	- abnormal operating mode ..... :	Short-circuited of output of driver, light shut down	—
1.12 (12.4)	- test 1: rated voltage ..... :	240	—
	- test 2: 1,06 times rated voltage or 1,05 times rated wattage or 1,1 times constant voltage/current ..... :	240 x 1,06	—
	- test 3: Load on wiring to socket-outlet, 1,06 times voltage or 1,05 times wattage ..... :	--	—
	Through wiring or looping-in wiring loaded by a current of A during the test ..... :	--	—
1.12 (12.5)	- test 4: 1,1 times rated voltage or 1,05 times rated wattage or 1,1 times constant voltage/current ..... :	--	—

Temperature measurements (°C)

Part	Ambient	Cl. 12.4 – normal				Cl. 12.5 – abnormal	
		test 1	test 2	test 3	limit	test 4	limit
Supply cord	25	--	27,2	--	75	--	--
Tc on driver	25	53,3	--	--	80	--	--
Light guide plate	25	--	42,8	--	90	--	--
PCB for LED module	25	--	57,0	--	90	--	--
Mounting surface	25	--	35,5	--	90	--	--
Supplementary information: --							

ANNEX 2	TABLE: Thermal tests of Section 12		P
	Type reference ..... :	BM-FPL72060	—
	Lamp used..... :	As delivered	—
	Lamp control gear used..... :	BK-PUL060A-2000Ad	—

IEC 60598-2-1			
Clause	Requirement + Test	Result - Remark	Verdict
	Mounting position of luminaire ..... :	Normal mounting position	—
	Supply wattage (W) ..... :	61,3	—
	Supply current (A) ..... :	0,264	—
	Temperatures in test 1 - 4 below are corrected for ta (°C) ..... :	25	—
	- abnormal operating mode ..... :	Short-circuited of output of driver, light shut down	—
1.12 (12.4)	- test 1: rated voltage ..... :	240	—
	- test 2: 1,06 times rated voltage or 1,05 times rated wattage or 1,1 times constant voltage/current ..... :	240 x 1,06	—
	- test 3: Load on wiring to socket-outlet, 1,06 times voltage or 1,05 times wattage ..... :	--	—
	Through wiring or looping-in wiring loaded by a current of A during the test ..... :	--	—
1.12 (12.5)	- test 4: 1,1 times rated voltage or 1,05 times rated wattage or 1,1 times constant voltage/current ..... :	--	—

Temperature measurements (°C)

Part	Ambient	Cl. 12.4 – normal				Cl. 12.5 – abnormal	
		test 1	test 2	test 3	limit	test 4	limit
Tc on driver	25	52,0	--	--	80	--	--

Supplementary information: --

ANNEX 2	TABLE: Thermal tests of Section 12		P
	Type reference ..... :	BM-PL25060	—
	Lamp used..... :	As delivered	—
	Lamp control gear used..... :	BK-PLL056-1400	—
	Mounting position of luminaire ..... :	Normal mounting position	—
	Supply wattage (W) ..... :	57,2	—
	Supply current (A) ..... :	0,183	—
	Temperatures in test 1 - 4 below are corrected for ta (°C) ..... :	25	—
	- abnormal operating mode ..... :	Short-circuited of output of driver, light shut down	—
1.12 (12.4)	- test 1: rated voltage ..... :	240	—
	- test 2: 1,06 times rated voltage or 1,05 times rated wattage or 1,1 times constant voltage/current ..... :	240 x 1,06	—

IEC 60598-2-1			
Clause	Requirement + Test	Result - Remark	Verdict
	- test 3: Load on wiring to socket-outlet, 1,06 times voltage or 1,05 times wattage ..... :	--	—
	Through wiring or looping-in wiring loaded by a current of A during the test ..... :	--	—
1.12 (12.5)	- test 4: 1,1 times rated voltage or 1,05 times rated wattage or 1,1 times constant voltage/current ..... :	--	—

Temperature measurements (°C)

Part	Ambient	Cl. 12.4 – normal				Cl. 12.5 – abnormal	
		test 1	test 2	test 3	limit	test 4	limit
Tc on driver	25	61,3	--	--	85	--	--

Supplementary information: --

ANNEX 2	TABLE: Thermal tests of Section 12		P
	Type reference ..... :	BM-PL23048	—
	Lamp used..... :	As delivered	—
	Lamp control gear used..... :	DL-50W1A15-LEF	—
	Mounting position of luminaire ..... :	Normal mounting position	—
	Supply wattage (W) ..... :	48,5	—
	Supply current (A) ..... :	0,218	—
	Temperatures in test 1 - 4 below are corrected for ta (°C) ..... :	25	—
	- abnormal operating mode ..... :	Short-circuited of output of driver, light shut down	—
1.12 (12.4)	- test 1: rated voltage ..... :	240	—
	- test 2: 1,06 times rated voltage or 1,05 times rated wattage or 1,1 times constant voltage/current ..... :	240 x 1,06	—
	- test 3: Load on wiring to socket-outlet, 1,06 times voltage or 1,05 times wattage ..... :	--	—
	Through wiring or looping-in wiring loaded by a current of A during the test ..... :	--	—
1.12 (12.5)	- test 4: 1,1 times rated voltage or 1,05 times rated wattage or 1,1 times constant voltage/current ..... :	--	—

Temperature measurements (°C)

Part	Ambient	Cl. 12.4 – normal				Cl. 12.5 – abnormal	
		test 1	test 2	test 3	limit	test 4	limit
Tc on driver	25	64,3	--	--	80	--	--

IEC 60598-2-1			
Clause	Requirement + Test	Result - Remark	Verdict

Supplementary information: --

ANNEX 2	TABLE: Thermal tests of Section 12		P
	Type reference ..... :	BM-BPL83080	—
	Lamp used..... :	As delivered	—
	Lamp control gear used..... :	2x LD042BC100W89ADA002	—
	Mounting position of luminaire ..... :	Normal mounting position	—
	Supply wattage (W) ..... :	82,4	—
	Supply current (A) ..... :	0,349	—
	Temperatures in test 1 - 4 below are corrected for ta (°C) ..... :	25	—
	- abnormal operating mode ..... :	Short-circuited of output of driver, light shut down	—
1.12 (12.4)	- test 1: rated voltage ..... :	240	—
	- test 2: 1,06 times rated voltage or 1,05 times rated wattage or 1,1 times constant voltage/current ..... :	240 x 1,06	—
	- test 3: Load on wiring to socket-outlet, 1,06 times voltage or 1,05 times wattage ..... :	--	—
	Through wiring or looping-in wiring loaded by a current of A during the test ..... :	--	—
1.12 (12.5)	- test 4: 1,1 times rated voltage or 1,05 times rated wattage or 1,1 times constant voltage/current ..... :	--	—

Temperature measurements (°C)

Part	Ambient	Cl. 12.4 – normal				Cl. 12.5 – abnormal	
		test 1	test 2	test 3	limit	test 4	limit
Supply cord	25	--	50,1	--	90	--	--
Mounting surface	25	--	35,5	--	90	--	--
Wire to LED	25	--	36,5	--	90	--	--
Diffusion plate	25	--	30,9	--	90	--	--
LED module	25	--	57,0	--	130	--	--
tc on driver	25	51,6	--	--	85	--	--
Terminal block	25	--	46,3	--	110	--	--
CX1	25	--	60,6	--	110	--	--
C2	25	--	55,6	--	105	--	--
EC2	25	--	82,9	--	105	--	--
EC1	25	--	58,6	--	105	--	--

IEC 60598-2-1			
Clause	Requirement + Test	Result - Remark	Verdict

EC3	25	--	63,7	--	105	--	--
CY1	25	--	69,9	--	125	--	--
Bobbin	25	--	70,3	--	130	--	--
Transformer winding	25	--	77,4	--	130	--	--
PCB	25	--	54,5	--	130	--	--
Supplementary information: --							

ANNEX 2	**TABLE: Thermal tests of Section 12**		**P**
	Type reference ..... :	BM-PL92040	—
	Lamp used..... :	As delivered	—
	Lamp control gear used..... :	BK-PPL042-1000	—
	Mounting position of luminaire ..... :	Normal mounting position	—
	Supply wattage (W) ..... :	41,4	—
	Supply current (A) ..... :	0,175	—
	Temperatures in test 1 - 4 below are corrected for ta (°C) ..... :	25	—
	- abnormal operating mode ..... :	Short-circuited of output of driver, light shut down	—
1.12 (12.4)	- test 1: rated voltage ..... :	240	—
	- test 2: 1,06 times rated voltage or 1,05 times rated wattage or 1,1 times constant voltage/current ..... :	240 x 1,06	—
	- test 3: Load on wiring to socket-outlet, 1,06 times voltage or 1,05 times wattage ..... :	--	—
	Through wiring or looping-in wiring loaded by a current of A during the test ..... :	--	—
1.12 (12.5)	- test 4: 1,1 times rated voltage or 1,05 times rated wattage or 1,1 times constant voltage/current ..... :	--	—

Temperature measurements (°C)

Part	Ambient	Cl. 12.4 – normal				Cl. 12.5 – abnormal	
		test 1	test 2	test 3	limit	test 4	limit
Supply cord	25	--	30,7	--	90	--	--
Mounting surface	25	--	27,0	--	90	--	--
Wire to LED	25	--	31,2	--	90	--	--
Diffusion plate	25	--	31,8	--	90	--	--
LED module	25	--	55,8	--	130	--	--
tc on driver	25	41,6	--	--	85	--	--

IEC 60598-2-1			
Clause	Requirement + Test	Result - Remark	Verdict

CX1	25	--	40,5	--	110	--	--
C2	25	--	40,8	--	105	--	--
C3	25	--	51,5	--	105	--	--
C9	25	--	53,0	--	105	--	--
C8	25	--	49,3	--	105	--	--
CY1	25	--	49,7	--	125	--	--
Bobbin	25	--	62,5	--	130	--	--
Transformer winding	25	--	66,6	--	130	--	--
PCB	25	--	41,5	--	130	--	--
Supplementary information: --							

ANNEX 3	**Screw terminals (part of the luminaire)**	N/A

ANNEX 4	**Screwless terminals (part of the luminaire)**	N/A

IEC 60598-2-1			
Clause	Requirement + Test	Result - Remark	Verdict

ATTACHMENT TO TEST REPORT IEC 60598-2-1 **EUROPEAN GROUP DIFFERENCES AND NATIONAL DIFFERENCES** Luminaires Part 2: Particular requirements Section 1: Fixed general purpose luminaires
Differences according to..... EN 60598-2-1:1989 used in conjunction with EN 60598-1:2015 + A1:2018
Annex Form No...... EU_GD_IEC60598_2_1F **Annex Form Originator**..... IMQ S.p.A. **Master Annex Form**..... 2018-08-28
Copyright © 2018 IEC System for Conformity Testing and Certification of Electrical Equipment (IECEE), Geneva, Switzerland. All rights reserved.

	CENELEC COMMON MODIFICATIONS (EN)		**P**

1.5 (3)	**MARKING**		**N/A**
1.5 (3.3.101)	For luminaires not supplied with terminal block: Adequate warning on the package		N/A

1.6 (4)	**CONSTRUCTION**		**N/A**
1.6 (4.11.6)	Electro-mechanical contact systems		N/A

1.10 (5)	**EXTERNAL AND INTERNAL WIRING**		**P**
1.10 (5.2.1)	Connecting leads		N/A
	- without a means for connection to the supply		N/A
	- terminal block specified		N/A
	- relevant information provided		N/A
	- compliance with 4.6, 4.7.1, 4.7.2, 4.10.1, 11.2, 12 and 13.2 of Part 1		N/A
1.10 (5.2.2)	Cables equal to EN 50525		P
	Replace table 5.1 – Supply cord		P

1.12 (12)	**ENDURANCE TESTS AND THERMAL TESTS**		**N/A**
1.12 (12.4.2c)	Thermal test (normal operation) see footnote c to table 12.2 relating to unsleeved fixed wiring		N/A

IEC 60598-2-1			
Clause	Requirement + Test	Result - Remark	Verdict

ZB	**ANNEX ZB, SPECIAL NATIONAL CONDITIONS (EN)**		**N/A**
(3.3)	DK: power supply cords of class I luminaires with label		N/A
(4.5.1)	DK: socket-outlets		N/A
(5.2.1)	CY, DK, FI, GB: type of plug		N/A

ZC	**ANNEX ZC, NATIONAL DEVIATIONS (EN)**		**N/A**
(4 & 5)	FR: Shuttered socket-outlets 10/16A		N/A
	FR: Safety requirements for high buildings (Arrêté du 30 décembre 2011 portant règlement de sécurité pour la construction des immeubles de grande hauteur et leur protection contre les risques d'incendie et de panique; Section VIII; Article GH 48, Eclairage) Glow-wire test for outer parts of luminaires:		N/A
	- 850°C for luminaires in stairways and horizontal travel paths		N/A
	- 650°C for indoor luminaires		N/A
(13.3)	GB: Requirements according to United Kingdom Building Regulation		N/A

Annex-IEC 62031			
Clause	Requirement + Test	Result - Remark	Verdict

4	**GENERAL REQUIREMENTS**		**P**
4.4	Integral modules tested assembled in the luminaire		P
4.5	Independent modules complies with requirements in IEC 60598-1		N/A

5	**GENERAL TEST REQUIREMENTS**		P
5.5	SELV-operated LED modules comply with Annex I of IEC 61347-2-13	(see Annex 1)	N/A
	General conditions for tests in Annex A	(see Annex A)	N/A

6	**CLASSIFICATION**		**P**
	Built-in module .....:	Yes ☐ No ☒	—
	Independent module .....:	Yes ☐ No ☒	—
	Integral module .....:	Yes ☒ No ☐	—
	For Integral module; Note to 1.2.1 in IEC 60598-1 applies.		

7	**MARKING**	**N/A**

8	**TERMINALS**	**N/A**

9 (9)	**PROVISION FOR PROTECTIVE EARTHING**	**N/A**

10 (10)	**PROTECTION AGAINST ACCIDENTAL CONTACT WITH LIVE PARTS**	**N/A**

11 (11)	**MOISTURE RESISTANCE AND INSULATION**		**P**
	After storage 48 h at 91-95% relative humidity and 20-30 °C measuring of insulation resistance with d.c. 500 V (MΩ):		P
	For basic insulation ≥ 2 MΩ .....:	See IEC 60598 parts	P
	For double or reinforced insulation ≥ 4 MΩ .....:		N/A
	Between primary and secondary circuits in controlgear providing SELV, values in Annex L in IEC 61347-1		N/A

12 (12)	**ELECTRIC STRENGTH**		**P**
	Immediately after clause 11 electric strength test for 1 min		P
	Basic insulation for SELV, test voltage 500 V		P

Annex-IEC 62031			
Clause	Requirement + Test	Result - Remark	Verdict
	Working voltage ≤ 50 V, test voltage 500 V		N/A
	Working voltage > 50 V ≤ 1000 V, test voltage (V):		N/A
	Basic insulation, 2U + 1000 V		N/A
	Supplementary insulation, 2U + 1000 V		N/A
	Double or reinforced insulation, 4U + 2000 V		N/A
	No flashover or breakdown		P
	Solid or thin sheet insulation for double or reinforced insulation fulfil the requirements in Annex N in IEC 61347-1		N/A

13 (14)	**FAULT CONDITIONS**		**P**
- (14)	When operated under fault conditions the controlgear:		P
	- does not emit flames or molten material		P
	- does not produce flammable gases		P
	- protection against accidental contact not impaired		P
	Thermally protected controlgear does not exceed the marked temperature value		N/A
	Fault conditions: capacitors, resistors or inductors without proof of compliance with relevant specifications have been short-circuited or disconnected	(see appended table)	N/A
- (14.1)	Short-circuit of creepage distances and clearances if less than specified in clause 16 in Part 1 (except between live parts and accessible metal parts)	(see appended table)	N/A
	Creepage distances on printed boards less than specified in clause 16 in Part 1 provided with coating according to IEC 60664-3		N/A
- (14.2)	Short-circuit or interruption of semiconductor devices	LED	P
- (14.3)	Short-circuit across insulation consisting of lacquer, enamel or textile	(see appended table)	N/A
- (14.4)	Short-circuit across electrolytic capacitors	(see appended table)	N/A
- (14.5)	After the tests has been carried out on three samples:		P
	The insulation resistance ≥ 1 MΩ .....:	>500 MΩ	P
	No flammable gases		P
	No accessible parts have become live		P
	During the tests, a five-layer tissue paper, where the test specimen is wrapped, does not ignite		P
- (14.6)	Relevant fault condition tests with high-power supply		P
13.2	**Overpower condition**		**P**

Annex-IEC 62031			
Clause	Requirement + Test	Result - Remark	Verdict
	Module withstands overpower condition >15 min.		P
	Module with automatic protective device or power limiter, test performed 15 min. at limit.		N/A
	No fire, smoke or flammable gas is produced		P
	Molten material does not ignite tissue paper, spread below the module		P
15	**CONSTRUCTION**		**P**
	Wood, cotton, silk, paper and similar fibrous material not used as insulation		P
16 (16)	**CREEPAGE DISTANCES AND CLEARANCES**		**N/A**
- (16)	Creepage and distances and clearances in compliance with IEC 61347-1	SELV driver max output voltage: 54 V DC	N/A
	Insulating lining of metallic enclosures		N/A
	Basic insulation on printed boards tested according to clause 14		N/A
	Distances subjected to both sinusoidal voltage as non-sinusoidal pulses not less than value in Table 16		N/A
	Creepage distances not less than minimum clearance		N/A
16 (-)	Conductive accessible parts in compliance with applicable parts of IEC 60598-1		N/A
17 (17)	**SCREWS, CURRENT-CARRYING PARTS AND CONNECTIONS**		**P**
	Cl. 17 refer to Cl. 17 of IEC 61347-1 which refer to Cl. 4.11 and 4.12 of IEC 60598-1 (clause numbers between parentheses refer to IEC 60598-1)		—
(4.11)	**Electrical connections**		**P**
(4.11.1)	Contact pressure		P
(4.11.2)	Screws:		N/A
	- self-tapping screws		N/A
	- thread-cutting screws		N/A
(4.11.3)	Screw locking:		N/A
	- spring washer		N/A
	- rivets		N/A
(4.11.4)	Material of current-carrying parts		P
(4.11.5)	No contact to wood or mounting surface		P
(4.11.6)	Electro-mechanical contact systems		N/A

Annex-IEC 62031			
Clause	Requirement + Test	Result - Remark	Verdict
(4.12)	**Mechanical connections and glands**		N/A
(4.12.1)	Screws not made of soft metal		N/A
	Screws of insulating material		N/A
	Torque test: torque (Nm); part.....:		N/A
	Torque test: torque (Nm); part.....:		N/A
	Torque test: torque (Nm); part.....:		N/A
(4.12.2)	Screws with diameter < 3 mm screwed into metal		N/A
(4.12.4)	Locked connections:		N/A
	- fixed arms; torque (Nm) .....:		N/A
	- lampholder; torque (Nm) .....:		N/A
	- push-button switches; torque 0,8 Nm .....:		N/A
(4.12.5)	Screwed glands; force (Nm).....:		N/A
18 (18)	**RESISTANCE TO HEAT, FIRE AND TRACKING**		**N/A**
- (18.1)	Ball-pressure test .....:		N/A
- (18.3)	Glow-wire test (650°C) .....:		N/A
- (18.4)	Needle-flame test (10 s) .....:		N/A
- (18.5)	Proof tracking test .....:		N/A
19 (19)	**RESISTANCE TO CORROSION**		**N/A**
	- test according 4.18.1 of IEC 60598-1		N/A
	- adequate varnish on the outer surface		N/A
20	**INFORMATION FOR LUMINAIRE DESIGN**		**N/A**
	Information in Annex D (informative)		—
21	**HEAT MANAGEMENT**		**N/A**
21.1	**General**		N/A
	Exchangeability is safeguarded by cap or base		N/A
21.2	**Heat-conducting foil and paste**		N/A
	Heat-conducting foil delivered with the module if necessary		N/A
22	**PHOTOBIOLOGICAL SAFETY**		**P**
22.1	**UV radiation**		N/A
	Luminous radiation not exceed 2mW/klm		N/A
22.2	**Blue light hazard**		**P**

Annex-IEC 62031			
Clause	Requirement + Test	Result - Remark	Verdict
	Assessed according to IEC TR 62778		P
22.3	**Infrared radiation**		N/A
	Requirements for infrared radiation when required		N/A

A	**ANNEX A - TESTS**	**P**
	All tests performed in accordance with the advice given in Annex H of IEC 61347-1, if applicable	P

13 (14)	**TABLE: tests of fault conditions**	**P**
Part	**Simulated fault**	**Hazard**
LEDs	Short-circuited, shut off, recoverable, no damage.	NO

Annex-IEC 61347-2-13			
Clause	Requirement + Test	Result - Remark	Verdict

6 (6)	**CLASSIFICATION**		**P**
	Built-in controlgear ..... :	Yes ☐ No ☒	—
	Independent controlgear..... :	Yes ☒ No ☐	—
	Integral controlgear ..... :	Yes ☐ No ☒	—
6 (-)	Auto-wound controlgear ..... :	Yes ☐ No ☒	—
	Separating controlgear ..... :	Yes ☐ No ☒	—
	Isolating controlgear ..... :	Yes ☐ No ☒	—
	SELV controlgear ..... :	Yes ☒ No ☐	—

7 (7)	**MARKING**		P
7.1 (7.1)	**Mandatory markings**		**P**
	a) mark of origin		P
	b) model number or type reference		P
	c) symbol for independent controlgear, if applicable		P
	d) correlation between interchangeable parts and controlgear marked		N/A
	e) rated supply voltage (V)		P
	supply frequency (Hz)		P
	supply current (A)		P
	f) earthing symbol		N/A
	k) wiring diagram		P
	l) value of tc		P
	m) symbol for declared temperature		N/A
	t) LUM earthing symbol		N/A
	u) if not SELV maximum working voltage U_{out} between:		N/A
	- output terminals (V) ..... :		N/A
	- output terminals and earth (V) ..... :		N/A
7.1 (-)	Constant voltage type:	Yes ☐ No ☒	—
	- rated output power P_{rated} (W) ..... :		N/A
	- rated output voltage U_{rated} (V) ..... :		N/A
	Constant current type:	Yes ☒ No ☐	—
	- rated output power P_{rated} (W) ..... :	For LD series: 42W max; For BK-PPL042 series: 40W max	P
	- rated output current I_{rated} (A) ..... :	For LD series: 100mA-1000mA; For BK-PPL042 series: 600mA-1000mA;	P
	Indication if for LED modules only		N/A
7.1 (7.2)	Marking durable and legible		P
	Rubbing 15 s water, 15 s petroleum; marking legible		P
7.2 (7.1)	**Information to be provided, if applicable**		**P**
	h) declaration of protection against accidental contact		N/A
	i) cross-section of conductors (mm²)		P
	j) number, type and wattage of lamp(s)		N/A
	s) SELV symbol		P
7.2 (-)	- declaration of mains connected windings		N/A

Annex-IEC 61347-2-13			
Clause	Requirement + Test	Result - Remark	Verdict

8 (10)	**PROTECTION AGAINST ACCIDENTAL CONTACT WITH LIVE PARTS**		**P**
- (10.1)	Controlgear protected against accidental contact with live parts		P
- (A2)	Voltage measured with 50 kΩ	(see Annex A)	N/A
- (A3)	Voltage > 35 V peak or > 60 V d.c. or protective impendance device	(see Annex A)	N/A
- (10.1)	Lacquer or enamel not used for protection or insulation		P
	Adequate mechanical strength on parts providing protection		P
- (10.2)	Capacitors > 0,5 μF: voltage after 1 min (V): < 50 V ..... :	0	P
- (10.3)	**Controlgear providing SELV**		**P**
	Accessible conductive parts are insulated from live parts by double or reinforced insulation in SELV controlgear		P
	No connection between output circuit and the body or protective earthing circuit		P
	No possibility of connection between output circuit and the body or protective earthing circuit through other conductive parts		P
	SELV outputs separated by at least basic insulation		P
	ELV conductive parts insulated as live parts		N/A
	Tests according Annex L of IEC 61347-1		P
- (10.4)	**Accessible conductive parts in SELV circuits**		P
	Output voltage under load ≤ 25 V r.m.s. or ≤ 60 V d.c.		P
	If output voltage > 25 V r.m.s. or > 60 V d.c.; No load output ≤ 35 V peak or ≤ 60 V d.c and touch current does not exceed 0,7 mA (peak) or 2 mA d.c. ..... :		N/A
	One conductive part is insulated if output voltage or current exceeding the values above and withstand test voltage 500 V		N/A
	Double or reinforced insulation bridged by appropriate and at least two resistors or two Y2 capacitors or one Y1 capacitor		P
	Y1 or Y2 capacitors comply with IEC 60384-14		P
	Resistors comply with test (a) in 14.1 of IEC 60065		N/A

9 (8)	**TERMINALS**		**P**
	Screw terminals according section 14 of IEC 60598-1:		P
	Separately approved; component list	(see Annex 1)	P
	Part of the controlgear	(see Annex 2)	N/A
	Screwless terminals according section 15 of IEC 60598-1:		N/A
	Separately approved; component list	(see Annex 1)	N/A
	Part of the controlgear	(see Annex 3)	N/A

Annex-IEC 61347-2-13			
Clause	Requirement + Test	Result - Remark	Verdict

10 (9)	**PROVISION FOR PROTECTIVE EARTHING**		**N/A**
- (9.1)	**Provisions for protective earthing**		N/A
	Terminal complying with clause 8		N/A
	Locked against loosening and not possible to loosen by hand		N/A
	Not possible to loosen clamping means unintentionally on screwless terminals		N/A
	All parts of material minimizing the danger of electrolytic corrosion		N/A
	Made of brass or equivalent material		N/A
	Contact surface bare metal		N/A
	Test according 7.2.3 of IEC 60598-1		N/A
- (9.2)	**Provision for functional earthing**		**N/A**
	Comply with clause 8 and 9.1		N/A
	Functional earth insulated from live parts by double or reinforced insulation		N/A
- (9.3)	**Lamp controlgear with conductors for protective earthing by tracks on printed circuit board**		**N/A**
	Test with a current of 25 A between earthing terminal or earthing contact and each of the accessible metal parts; measured resistance (Ω) at ≥ 10 A according 7.2.3 of IEC 60598-1: < 0,5 Ω ..... :		
- (9.4)	**Earthing of built-in lamp controlgear**		N/A
	Earth by means of fixing to earthed metal of luminaire in compliance of 7.2 of IEC 60598-1		N/A
	Earthing terminal only for earthing the built-in controlgear		N/A
- (9.5)	**Earthing via independent controlgear**		N/A
- (9.5.1)	Earth connection to other equipment		N/A
	Looping or through connection, conductor min. 1,5 mm² and of copper or equivalent		N/A
	Protective earthing wires in line with 5.3.1.1 and clause 7 of IEC 60598-1		N/A
- (9.5.2)	Earthing of the lamp compartments powered via the independent lamp controlgear		N/A

Annex-IEC 61347-2-13			
Clause	Requirement + Test	Result - Remark	Verdict
	Test with a current of 25 A between input and output earth terminals; measured resistance (Ω) between earthing terminal or earthing contact and each of the accessible metal parts at ≥ 10 A according 7.2.3 of IEC 60598-1: < 0,5 Ω ..... :		N/A
	Output earthing terminal marked as in 7.1 t) of IEC 61347-1		N/A
11 (11)	**MOISTURE RESISTANCE AND INSULATION**		**P**
	After storage 48 h at 91-95% relative humidity and 20-30 °C measuring of insulation resistance with d.c. 500 V (MΩ):		P
	For basic insulation ≥ 2 MΩ ..... :		N/A
	For double or reinforced insulation ≥ 4 MΩ ..... :	see IEC 60598 part	P
	Between primary and secondary circuits in controlgear providing SELV, values in Annex L in IEC 61347-1		P
12 (12)	**ELECTRIC STRENGTH**		**P**
	Immediately after clause 11 electric strength test for 1 min		P
	Basic insulation for SELV, test voltage 500 V	Output – LED panel: 500 V	P
	Working voltage ≤ 50 V, test voltage 500 V		N/A
	Working voltage > 50 V ≤ 1000 V, test voltage (V):		N/A
	Basic insulation, 2U + 1000 V		N/A
	Supplementary insulation, 2U + 1000 V		N/A
	Double or reinforced insulation, 4U + 2000 V	see IEC 60598 part	P
	No flashover or breakdown		P
	Solid or thin sheet insulation for double or reinforced insulation fulfil the requirements in Annex N in IEC 61347-1		N/A
14 (14)	**FAULT CONDITIONS**		**P**
- (14.1)	When operated under fault conditions the controlgear:		P
	- does not emit flames or molten material		P
	- does not produce flammable gases		P
	- protection against accidental contact not impaired		P
	Thermally protected controlgear does not exceed the marked temperature value		N/A
	Fault conditions: capacitors, resistors or inductors without proof of compliance with relevant specifications have been short-circuited or disconnected	(see appended table)	P
- (14.2)	Short-circuit of creepage distances and clearances if less than specified in clause 16 in Part 1 (after any reduction in 14.2 - 14.5)	(see appended table)	P
- (14.3)	Short-circuit or interruption of semiconductor devices	(see appended table)	P

Annex-IEC 61347-2-13			
Clause	Requirement + Test	Result - Remark	Verdict
- (14.4)	Short-circuit across insulation consisting of lacquer, enamel or textile	(see appended table)	P
- (14.5)	Short-circuit across electrolytic capacitors	(see appended table)	P
14 (-)	Reversed voltage polarity if d.c. supplied control gear	(see appended table)	N/A
- (14.6)	After the tests has been carried out on three samples:		P
	The insulation resistance ≥ 1 MΩ ..... :	> 500 MΩ	P
	No flammable gases		P
	No accessible parts have become live		P
	During the tests, a five-layer tissue paper, where the test specimen is wrapped, does not ignite		P
- (14.7)	Relevant fault condition tests with high-power supply		—
14 (-)	Temperature declared thermally protected lamp controlgear fulfil requirements in Annex C		N/A

15 (-)	**TRANSFORMER HEATING**		**P**
15.1	**General**		**P**
	Transformer comply with clause L.6 and L.7 of IEC 61347-1		P
	Output voltage of SELV controlgear not exceed limits in 10.4 of IEC 61347-1 during the test of 15.1 and 15.2		P
15.2 (-)	**Normal operation**		**P**
	Comply with clause L.6 of IEC 61347-1		P
15.3 (-)	**Abnormal operation**		**P**
	Comply with clause L.7 of IEC 61347-1		P
	Double LED modules or equivalent load connected in parallel to the output terminals of constant voltage type		N/A
	Double LED modules or equivalent load connected in parallel to the output terminals of constant current type		P
15 (-)	During and at the end of the tests no defect impairing safety, nor any smoke or flammable gases produced		**P**

16 (15)	**CONSTRUCTION**		**P**
- (15.1)	**Wood, cotton, silk, paper and similar fibrous material**		**P**
	Wood, cotton, silk, paper and similar fibrous material not used as insulation		P
- (15.2)	**Printed circuits**		**P**
	Printed circuits used as internal connections complies with clause 14		P
- (15.3)	**Plugs and socket-outlets used in SELV or ELV circuits**		**N/A**
	No dangerous compatibility between output socket-outlet and a plug for socket-outlets for input circuit in relation to installation rules, voltages and frequencies		N/A
	Plugs and socket-outlets for SELV comply with IEC 60906-3 and IEC 60884-2-4		N/A

Annex-IEC 61347-2-13			
Clause	Requirement + Test	Result - Remark	Verdict
	Plugs and socket-outlets for SELV ≤ 3 A, ≤ 25 V r.m.s. or ≤ 60 V d.c. and ≤ 72 W comply with IEC 60906-3 and IEC 60884-2-4 or:		N/A
	- plugs not able to enter socket-outlets of other standardised system		N/A
	- socket-outlets not admit plugs of other standardised system		N/A
	- socket-outlets without protective earth		N/A
- (15.4)	**Insulation between circuits and accessible parts**		**P**
- (15.4.2)	SELV circuits		P
	Source used to supply SELV circuits:		P
	- safety isolating transformer in accordance with relevant part 2 of IEC 61558		P
	- controlgear providing SELV in accordance with relevant part 2 of IEC 61347		P
	- another source		N/A
	Voltage in the circuit not higher than ELV		P
	SELV circuits insulated from LV by double or reinforced insulation		P
	SELV circuits insulated from non SELV circuits by double or reinforced insulation		P
	SELV circuits insulated from FELV circuits by supplementary insulation		N/A
	SELV circuits insulated from other SELV circuits by basic insulation		N/A
	SELV circuits insulated from accessible conductive parts according Table 6 in 15.4.5		N/A
- (15.4.3)	FELV circuits		N/A
	Source used to supply FELV circuits:		N/A
	- separating transformer in accordance with relevant part 2 of IEC 61558		N/A
	- separating controlgear providing basic insulation between input and output circuits in accordance with relevant part 2 of IEC 61347		N/A
	- another source		N/A
	- source in circuits separated by the LV supply by basic insulation		N/A
	Voltage in the circuit not higher than ELV		N/A
	FELV circuits insulated from LV supply by at least basic insulation		N/A
	FELV circuits insulated from other FELV circuits if functional purpose		N/A
	FELV circuits insulated from accessible conductive parts according Table 6 in 15.4.5		N/A
	Plugs and socket-outlets for FELV system comply with:		N/A
	- plugs not able to enter socket-outlets of other voltage systems		N/A
	- socket-outlets not admit plugs of other voltage systems		N/A
	- socket-outlets have a protective conductor contact		N/A
- (15.4.4)	Other circuits		P

Annex-IEC 61347-2-13			
Clause	Requirement + Test	Result - Remark	Verdict

	Insulation between circuits other than SELV or FELV and accessible conductive parts in according Table 6 in 15.4.5.		N/A
- (15.4.5)	Insulation between circuits and accessible conductive parts		N/A
	Accessible conductive parts insulated from active parts of electric circuits by insulating according Table 6		N/A
	Requirements for Class II construction with equipotential bonding for protection against indirect contact with live parts:		N/A
	- all conductive parts are connected together		N/A
	- conductive parts are reliably connected together according test of IEC 60598-1 cl. 7.2.3		N/A
	- conductive parts comply with requirements of Annex A in case of insulation fault		N/A

17 (16)	**CREEPAGE DISTANCES AND CLEARANCES**		**P**
- (16)	Creepage distances and clearances according to 16.2 and 16.3		P
	Controlgears providing SELV comply with additional requirements in Annex L		P
	Insulating lining of metallic enclosures		N/A
	Controlgear protected against pollution comply with Annex P	(see Annex P)	N/A
- (16.2)	**Creepage distances**		**P**
- (16.2.2)	Minimum creepage distances for working voltages		P
	Creepage distances according to Table 7	(see appended table)	P
- (16.2.3)	Creepage distances for working voltages with frequencies above 30 kHz		N/A
	Creepage distances according to Table 8	(see appended table)	N/A
- (16.3)	**Clearances**		P
- (16.3.2)	Clearances for working voltage0073		P
	Clearances distances according to Table 9	(see appended table)	P
- (16.3.3)	Clearances for ignition voltages and working voltages with higher frequencies		N/A
	Clearances distances for basic or supplementary insulation according to Table 10	(see appended table)	N/A
	Clearances distances for reinforced insulation according to Table 11	(see appended table)	N/A

18 (17)	**SCREWS, CURRENT-CARRYING PARTS AND CONNECTIONS**		**P**
	Screws, current-carrying parts and connections in compliance with IEC 60598-1 (clause numbers between parentheses refer to IEC 60598-1)		P
(4.11)	**Electrical connections**		**P**
(4.11.1)	Contact pressure		N/A
(4.11.2)	Screws:		N/A
	- self-tapping screws		N/A
	- thread-cutting screws		N/A
(4.11.3)	Screw locking:		N/A
	- spring washer		N/A
	- rivets		N/A
(4.11.4)	Material of current-carrying parts		P
(4.11.5)	No contact to wood or mounting surface		P
(4.11.6)	Electro-mechanical contact systems		N/A
(4.12)	**Mechanical connections and glands**		**N/A**

Annex-IEC 61347-2-13			
Clause	Requirement + Test	Result - Remark	Verdict

(4.12.1)	Screws not made of soft metal		N/A
	Screws of insulating material		N/A
	Torque test: torque (Nm); part .....:		N/A
	Torque test: torque (Nm); part .....:		N/A
	Torque test: torque (Nm); part .....:		N/A
(4.12.2)	Screws with diameter < 3 mm screwed into metal		N/A
(4.12.4)	Locked connections:		N/A
	- fixed arms; torque (Nm).....:		N/A
	- lampholder; torque (Nm).....:		N/A
	- push-button switches; torque 0,8 Nm .....:		N/A
(4.12.5)	Screwed glands; force (Nm) .....:		N/A

19 (18)	**RESISTANCE TO HEAT, FIRE AND TRACKING**		**N/A**
- (18.1)	Ball-pressure test .....:	See Test Table 19 (18.1)	N/A
- (18.2)	Test of printed boards .....:	See Test Table 19 (18.2)	N/A
- (18.3)	Glow-wire test .....:	See Test Table 19 (18.3)	N/A
- (18.4)	Needle flame test .....:	See Test Table 19 (18.4)	N/A
- (18.5)	Tracking test .....:	See Test Table 19 (18.5)	N/A

20 (19)	**RESISTANCE TO CORROSION**		**N/A**
	- test according 4.18.1 of IEC 60598-1		N/A
	- adequate varnish on the outer surface		N/A

21 (-)	**MAXIMUM WORKING VOLTAGE (U_{out}) IN ANY LOAD CONDITION**		**P**
	Not exceed declared maximum working voltage U_{out} in any load condition		P

14	**TABLE: tests of fault conditions**	**P**
Part	Simulated fault	Hazard
For LED driver BK-PPL042-1000		
CN1	Short-circuit; no impairs safety	NO
C2	Short-circuit; no impairs safety	NO
L3	Short-circuit; no impairs safety	NO
D1	Short-circuit; no impairs safety	NO
C3	Short-circuit; no impairs safety	NO
C1	Short-circuit; no impairs safety	NO
HS2	Short-circuit; no impairs safety	NO
CY1	Short-circuit; no impairs safety	NO
C8	Short-circuit; no impairs safety	NO
CN2	Short-circuit; no impairs safety	NO
D8	Short-circuit; no impairs safety	NO
R43	Short-circuit; no impairs safety	NO
C6	Short-circuit; no impairs safety	NO
D7	Short-circuit; no impairs safety	NO
U2	Short-circuit; no impairs safety	NO
Q1	Short-circuit; no impairs safety	NO
D16	Short-circuit; no impairs safety	NO
Output	Short-circuit; no impairs safety	NO

Annex-IEC 61347-2-13			
Clause	Requirement + Test	Result - Remark	Verdict

For LED driver LD042BC100W89ADA002		
BD1	Short-circuit; no impairs safety	NO
C1	Short-circuit; no impairs safety	NO
L1	Short-circuit; no impairs safety	NO
EC2	Short-circuit; no impairs safety	NO
EC4	Short-circuit; no impairs safety	NO
Q4	Short-circuit; no impairs safety	NO
Q3	Short-circuit; no impairs safety	NO
EC3	Short-circuit; no impairs safety	NO
C4	Short-circuit; no impairs safety	NO
CY1	Short-circuit; no impairs safety	NO
CY2	Short-circuit; no impairs safety	NO
EC1	Short-circuit; no impairs safety	NO
Q1	Short-circuit; no impairs safety	NO
D4	Short-circuit; no impairs safety	NO
U1	Short-circuit; no impairs safety	NO
R30	Short-circuit; no impairs safety	NO
R5	Short-circuit; no impairs safety	NO
Output	Short-circuit; no impairs safety	NO

17 (16)	**TABLE: clearance and creepage distance measurements (mm)**						**P**
Applicable part of IEC 61347-1 Table 7 – 11*							
Distances	**Insulation type ****	**Measured clearance**	**Required**		**Measured creepage**	**Required**	
			clearance	***Table**		**creepage**	***Table**
Distance 1:	B	3,0	1,5	9	3,0	2,5	7
Working voltage (V) .....:					240 V		—
Frequency if applicable (kHz) .....:					--		—
PTI .....:					< 600 ☒ ≥ 600 ☐		—
Peak value of the working voltage $\hat{U}_{out}$ if applicable (kV) .....:					--		—
Pulse voltage if applicable (kV) .....:							—
Supplementary information: L – N on PCB (for LD series)							
Distance 2:	R	>7	3	9	>7	5	7
Working voltage (V) .....:					240 V		—
Frequency if applicable (kHz) .....:					--		—
PTI .....:					< 600 ☒ ≥ 600 ☐		—
Peak value of the working voltage $\hat{U}_{out}$ if applicable (kV) .....:					--		—
Pulse voltage if applicable (kV) .....:					--		—
Supplementary information: live part - accessible parts (for LD series)							
Distance 3:	R	7,3	3	9	7,4	5	7
Working voltage (V) .....:					240 V		—
Frequency if applicable (kHz) .....:					--		—
PTI .....:					< 600 ☒ ≥ 600 ☐		—
Peak value of the working voltage $\hat{U}_{out}$ if applicable (kV) .....:					--		—
Pulse voltage if applicable (kV) .....:					--		—
Supplementary information: Input – output on PCB (for LD series)							
Distance 4:	B	3,3	1,5	9	3,3	2,5	7
Working voltage (V) .....:					240 V		—

Annex-IEC 61347-2-13			
Clause	Requirement + Test	Result - Remark	Verdict

Frequency if applicable (kHz) ....:					--		—
PTI ....:					< 600 ☒ ≥ 600 ☐		—
Peak value of the working voltage $\hat{U}_{out}$ if applicable (kV) ....:					--		—
Pulse voltage if applicable (kV) ....:							—
Supplementary information: L – N on PCB (for BK-PPL042 series)							
Distance 5:	R	>8	3	9	>8	5	7
Working voltage (V) ....:					240 V		—
Frequency if applicable (kHz) ....:					--		—
PTI ....:					< 600 ☒ ≥ 600 ☐		—
Peak value of the working voltage $\hat{U}_{out}$ if applicable (kV) ....:					--		—
Pulse voltage if applicable (kV) ....:					--		—
Supplementary information: live part - accessible parts (for BK-PPL042 series)							
Distance 6:	R	7,0	3	9	7,0	5	7
Working voltage (V) ....:					240 V		—
Frequency if applicable (kHz) ....:					--		—
PTI ....:					< 600 ☒ ≥ 600 ☐		—
Peak value of the working voltage $\hat{U}_{out}$ if applicable (kV) ....:					--		—
Pulse voltage if applicable (kV) ....:					--		—
Supplementary information: Input – output on PCB (for BK-PPL042 series)							

** Insulation type: B – Basic; S – Supplementary; R – Reinforced

Annex-IEC 61347-2-13			
Clause	Requirement + Test	Result - Remark	Verdict

(A)	**ANNEX A - TEST TO ESTABLISH WHETHER A CONDUCTIVE PART IS A LIVE PART WHICH MAY CAUSE AN ELECTRIC SHOCK**		N/A
(A.1)	Comply with A.2 or A.3		N/A
(A.2)	Voltage ≤ 35 V peak or ≤ 60 V d.c .....:		N/A
(A.3)	If voltage measured according Clause A.2 exceeds the limit value; touch current does not exceed 0,7 mA (peak) or 2 mA d.c. .....:		N/A
	Comply with Annex G.2 of IEC 60598-1		N/A

(C)	**ANNEX C – PARTICULAR REQUIREMENTS FOR ELECTRONIC LAMP CONTROLGEAR WITH MEANS OF PROTECTION AGAINST OVERHEATING**		N/A
(C3)	**GENERAL REQUIREMENTS**		**N/A**
(C3.1)	Thermal protection means integral with the convertor, protected against mechanical damage		N/A
	Renewable only by means of a tool		N/A
	If function depending on polarity, for cord-connected equipment protection means in both leads		N/A
	Thermal links comply with IEC 60691		N/A
	Electrical controls comply with IEC 60730-2-3		N/A
(C3.2)	No risk of fire by breaking (clause C7)		N/A
(C5)	**CLASSIFICATION**		N/A
	a) automatic resetting type		—
	b) manual resetting type		—
	c) non-renewable, non-resetting type		—
	d) renewable, non-resetting type		—
	e) other type of thermal protection; description ..:		—
(C6)	**MARKING**		N/A
(C6.1)	Symbol for temperature declared thermally protected ballasts		N/A
(C6.2)	Declaration of the type of protection provided		N/A
(C7)	**LIMITATION OF HEATING**		N/A
(C7.1)	**Preselection test:**		N/A
	Test sample placed for at least 12 h in an oven having temperature (t_c - 5) K		N/A
	No operation of the protection device		N/A
(C7.2)	**Functioning of protection means:**		N/A

Annex-IEC 61347-2-13			
Clause	Requirement + Test	Result - Remark	Verdict
	Normal operation of the sample in a test enclosure according to Annex D at an ambient temperature such that (t_c +0; -5) °C is obtained		N/A
	No operation of the protection device		N/A
	Introducing of the most onerous test condition determined during test of clause 14.2 to 14.5		N/A
	Output of windings connected to the mains supply short-circuited, and other part of the controlgear operated under normal conditions		N/A
	Increasing of the current through the windings continuously until operation of the protection means		N/A
	Continuous measuring of the highest surface temperature		N/A
	Ballasts according to C5 a) or C5 e) operated until stable conditions are achieved		N/A
	Automatic-resetting thermal protectors working 3 times		N/A
	Ballasts according to C5 b) working 6 times		N/A
	Ballasts according to C5 c) and C5) d) working once		N/A
	Highest temperature does not exceed the marked value		N/A
	Any overshoot of 10% over the marked value within 15 min		N/A
	After 15 min value not exceed marked value		N/A
(D)	**ANNEX D – REQUIREMENTS FOR CARRY OUT THE HEATING TESTS OF THERMALLY PROTECTED LAMP CONTROLGEAR**		N/A
	Tests in C7 performed in accordance with Annex D, if applicable		N/A
(F)	**ANNEX F – DRAUGHT-PROOF ENCOSURE**		P
	Draught-proof enclosure in accordance with the description		P
	Dimensions of the enclosure		P
	Other design; description		N/A
(H)	**ANNEX H - TESTS**		P
	All tests performed in accordance with the advice given in Annex H, if applicable		P

Annex-IEC 61347-2-13			
Clause	Requirement + Test	Result - Remark	Verdict

I (L)	**ANNEX I IN THIS PART 2 – PARTICULAR ADDITIONAL REQUIREMENTS FOR SELV D.C. OR A.C. SUPPLIED ELECTRONIC CONTROLGEARS FOR LED MODULES**		P
(L.3)	**Classification**		**P**
	Class I	Yes ☐ No ☒	—
	Class II	Yes ☒ No ☐	—
	Class III	Yes ☐ No ☒	—
	non-inherently short circuit proof controlgear	Yes ☒ No ☐	—
	inherently short circuit proof controlgear	Yes ☐ No ☒	—
	fail safe controlgear	Yes ☐ No ☒	—
	non-short-circuit proof controlgear	Yes ☐ No ☒	—
(L.4)	**Marking**		**P**
	Adequate symbols are used		P
(L.5)	**Protection against electric shock**		**P**
	Comply with clause 9.2 of IEC 61558-1		P
(L.6)	**Heating**		**P**
	No excessive temperatures in normal use		P
	Value if capacitor t_c marked .....:	85	—
	Winding insulation classified as Class .....:	Class B	—
	Comply with tests of clause 14 of IEC 61558-1 with adjustments		P
(L.7)	**Short-circuit and overload protection**		**P**
	Comply with tests of clause 15 of IEC 61558-1 with adjustments		P
(L.8)	**Insulation resistance and electric strength**		**P**
(L.8.1)	Conditioned 48 h between 91 % and 95 %		P
(L.8.2)	Insulation resistance		P
	Between input- and output circuits not less than 5 MΩ .....:	Input – Output: >500 MΩ	P
	Between metal parts of class II convertors which are separated from live parts by basic insulation only and the body not less than 5 MΩ .....:		N/A
	Between metal foil in contact with the inner and outer surfaces of enclosures of insulating material not less than 2 MΩ .....:	Input - Output: >500 MΩ	P
(L.8.3)	Electric strength		P
	1) Between live parts of input circuits and live parts of output circuits .....:	Input - Output: 3000 Vac	P
	2) Over basic or supplementary insulation between:		N/A
	a) live parts having different polarity .....:		N/A

Annex-IEC 61347-2-13			
Clause	Requirement + Test	Result - Remark	Verdict
	b) live parts and body if intended to be connected to protective earth .....:		N/A
	c) accessible metal parts and a metal rod of the same diameter as the flexible cable or cord .....:		N/A
	d) live parts and an intermediate metal part .....:		N/A
	e) intermediate metal parts and the body .....:		N/A
	f) each input circuit and all other input circuits ....:		N/A
	3) Over reinforced insulation between the body and live parts .....:	Input – output: 3000 Vac	P
(L.9)	**Construction**		**P**
(L.9.1)	Transformer comply with 19.12 of IEC 61558-1 and 19 of IEC 61558-2-6		P
	HF transformer comply with 19 of IEC 61558-2-16		P
(L.10)	**Components**		**N/A**
	Protective devices comply with 20.6 – 20.11 of IEC 61558-1		N/A
(L.11)	**Creepage distances, clearances and distances through insulation**		**P**
	Creepage distances and clearances not less than in Clause 16		P
	Distance through insulation according Table L.5 in IEC 61347-1		P
	1) Basic distance through insulation		N/A
	Required distance (mm) .....:		—
	Measured (mm) .....:		N/A
	Supplementary information		—
	2) Supplementary distance through insulation		P
	Required distance (mm) .....:	0,13 mm (At least two layers)	—
	Measured (mm) .....:	Insulation tape in transformer: 0,15 mm > 0,13 mm (triple layers)	P
	Supplementary information		—
	3) Reinforced distance through insulation		P
	Required distance (mm) .....:	Input circuit and output circuit: Cr= 5,0 mm; Cl=3 mm	—
	Measured (mm) .....:	Input circuit and output circuit(for LD series):7,3 mm; Input circuit and output circuit(for BK-PPL042 series):7,0 mm	P
	Supplementary information		—

J (-)	**ANNEX J IN THIS PART 2 – PARTICULAR ADDITIONAL SAFETY REQUIREMENTS FOR A.C., A.C./D.C. OR D.C. SUPPLIED ELECTRONIC CONTROLGEAR FOR EMERGENCY LIGHTING**	N/A
J.1	**General**	**N/A**

Annex-IEC 61347-2-13			
Clause	Requirement + Test	Result - Remark	Verdict
	Intended for centralized emergency power supply	Yes ☐ No ☐	—
J.2	**Marking**		**N/A**
J.2.1	Mandatory markings		N/A
	a) symbol EL		N/A
	b) rated emergency supply voltage (V)		N/A
J.2.2	Information to be provided if applicable		N/A
	a) Limits of ambient temperature		N/A
	b) Emergency output factor (EOF_x)		N/A
	c) Information if intended for use in luminaires for high-risk task area lighting		N/A
J.3	General notes on tests		N/A
	Length of output cable in tests.....:		N/A
	Load instead of LED lamps/modules.....:		N/A
J.4	Starting conditions		N/A
	Start rated load in emergency mode without adversely affecting the performance		N/A
J.5	Operating condition		N/A
	Comply with the requirements of 7.2 of IEC 62384 at 90% and 110% of rated emergency supply voltage		N/A
J.6	Emergency supply current		N/A
	Emergency supply current not differ more than ±15 %		N/A
	Supply of low impedance and low inductance		N/A
J.7	EMC immunity		N/A
	Comply with the requirements of IEC 61547		N/A
J.8	Pulse voltage from central battery systems		N/A
	Withstand pulses according Table J.1		N/A
J.9	Tests for abnormal conditions		N/A
	Comply with the requirements of 12 of IEC 62384		N/A
J.10	Comply with the requirements of 13 of IEC 62384		N/A
J.11	Functional safety (EOF_x)		N/A
	Declared emergency output factor (EOF_x) achieved during emergency operation		N/A

(N)	**ANNEX N: REQUIREMENTS FOR INSULATION MATERIALS USED FOR DOUBLE OR REINFORCED INSULATION**		N/A
(N.4)	**General requirements**		N/A
(N.4.1)	Material comply with IEC 60085 and IEC 60216 series		N/A
(N.4.2)	**Solid insulation**		N/A

Annex-IEC 61347-2-13			
Clause	Requirement + Test	Result - Remark	Verdict
	Electric strength test at least 5 kV or 1,35 x test voltage in Table N.1		N/A
	If not classified according IEC 60085 and IEC 60216 series: Electric strength test increased 10 % of 5,5 kV or 1,5 x test voltage in Table N.1		N/A
(N.4.3)	**Thin sheet insulation**		N/A
(N.4.3.1)	Thickness and composition of thin sheet insulation		N/A
	- Inside the ballast and not subjected to handling or abrasion during the production and during maintenance		N/A
	- Non-separated layers: Min. 3 layers and fulfil mandrel test of 150N		N/A
	- Separated layers: Min. 2 layers and each layer fulfil mandrel test of 50N		N/A
	- Separated layers (alternative): Min. 3 layers and 2/3 of the layers fulfil mandrel test of 100N		N/A
(N.4.3.2)	Mandrel test (electric strength test during mechanical stress)		N/A
	Electric strength test after mandrel test:		N/A
	- Non-separated layers: min. 5 kV or 1,35 x test voltage in Table N.1		N/A
	- 2/3 of min. 3 separated layers: min. 5 kV or 1,25 x test voltage in Table N.1		N/A
	- one of 2 separated layers: min. 5 kV or 1,25 x test voltage in Table N.1		N/A
	No flashover or breakdown occurred		N/A

(O)	**ANNEX O: ADDITIONAL REQUIREMENTS FOR BUILT-IN ELECTRONIC CONTROLGEAR WITH DOUBLE OR REINFORCED INSULATION**		N/A
(O.6)	**Marking**		N/A
	Marking according clause 7 (7)	See clause 7	N/A
	Special symbol		N/A
	Meaning of the special symbol explained in catalogue		N/A
(O.7)	**Protection against accidental contact with live parts**		N/A
	Requirements of clause 8 (10)	See clause 8	N/A
	Test finger not possible to make contact with basic insulated metal parts		N/A
(O.8)	**Terminals**		N/A
	Clause 9 (8)	See clause 9	N/A
(O.9)	**Provision for earthing**		N/A
	Functional earthing terminals comply with clause 9 of part 1		N/A
	No protective earthing terminal		N/A

Annex-IEC 61347-2-13			
Clause	Requirement + Test	Result - Remark	Verdict
(O.10)	**Moisture resistance and insulation**		N/A
	Clause 11 (11)	See clause 11	N/A
(O.11)	**Electric strength**		N/A
	Clause 12 (12)	See clause 12	N/A
(O.13)	**Fault conditions**		N/A
	Clause 14 (14)	See clause 14	N/A
	End of test, between live part and accessible metal parts or external parts of insulating material in contact with the supporting surface comply with dielectric strength test reduced to 35 % of values according Table 1 in part 1		N/A
	Insulation resistance according to O.10 between live part and accessible metal parts or external parts of insulating material in contact with the supporting surface not less than 4 MΩ		N/A
(O.14)	**Construction**		N/A
	Clause 17 (15)	See clause 17	N/A
	Accessible metal parts insulated from live parts by double or reinforced insulation		N/A
	Live part insulated from supporting surface in contact with external faces by double or reinforced insulation		N/A
(O.15)	**Creepage distances and clearances**		N/A
	Clause 18 (16)	See clause 18	N/A
	Comply with corresponding values for luminaries in IEC 60598-1		N/A
(O.16)	**Screws, current-carrying parts and connections**		N/A
	Clause 19 (17)	See clause 19	N/A
(O.17)	**Resistance to heat and fire**		N/A
	Clause 20 (18)	See clause 20	N/A
(O.18)	**Resistance to corrosion**		N/A
	Clause 21 (19)	See clause 21	N/A

(P)	**Creepage distances and clearances and distance through isolation (DTI) for lamp controlgear which are protected against pollution by the use of coating or potting**		N/A
(P.1)	**General**		N/A
	P.2 applies if creepage distances less than the minimum in Table 7 and 8		N/A
	P.3 applies if clearance less than the minimum in Table 9, 10 and 11		N/A
(P.2)	**Creepage distances**		N/A
(P.2.2)	Minimum creepage distances for working voltages and rated voltages with frequencies up to 30 kHz (Table P.1)		N/A

Annex-IEC 61347-2-13			
Clause	Requirement + Test	Result - Remark	Verdict
	Basic or supplementary insulation:		N/A
	Required creepage .....:		—
	Measured .....:		N/A
	Supplementary information		—
	Reinforced insulation:		N/A
	Required creepage .....:		—
	Measured .....:		N/A
	Supplementary information		—
(P.2.3)	Creepage distances for working voltages with frequencies above 30 kHz (Table P.2)		N/A
	Voltage $\hat{U}_{out}$ kV .....:		—
	Frequency .....:		—
	Required distance .....:		—
	Measured .....:		N/A
	Supplementary information		—
(P.2.4)	Compliance with the required creepage distances		N/A
(P.2.4.1)	Compliance in accordance with 16.3.3 and test according P.2.4.2		N/A
(P.2.4.3)	Electrical tests after conditioning		N/A
(P.2.4.3.1)	Insulation resistance and electric strength according Clause 11 and 12		N/A
(P.3)	**Distance through isolation**		N/A
(P.3.4)	Electrical tests after conditioning		N/A
(P.3.4.1)	Insulation resistance and electric strength according Clause 11 and 12		N/A
(P.3.4.2)	Impulse voltage dielectrical test		N/A
	Basic or supplementary insulation:		N/A
	Working/rated voltage .....:		—
	Impulse voltage .....:		N/A
	Supplementary information		—
	Reinforced insulation:		N/A
	Working/rated voltage .....:		—
	Impulse voltage .....:		N/A
	Supplementary information		—

Annex PCB layout and circuit diagram

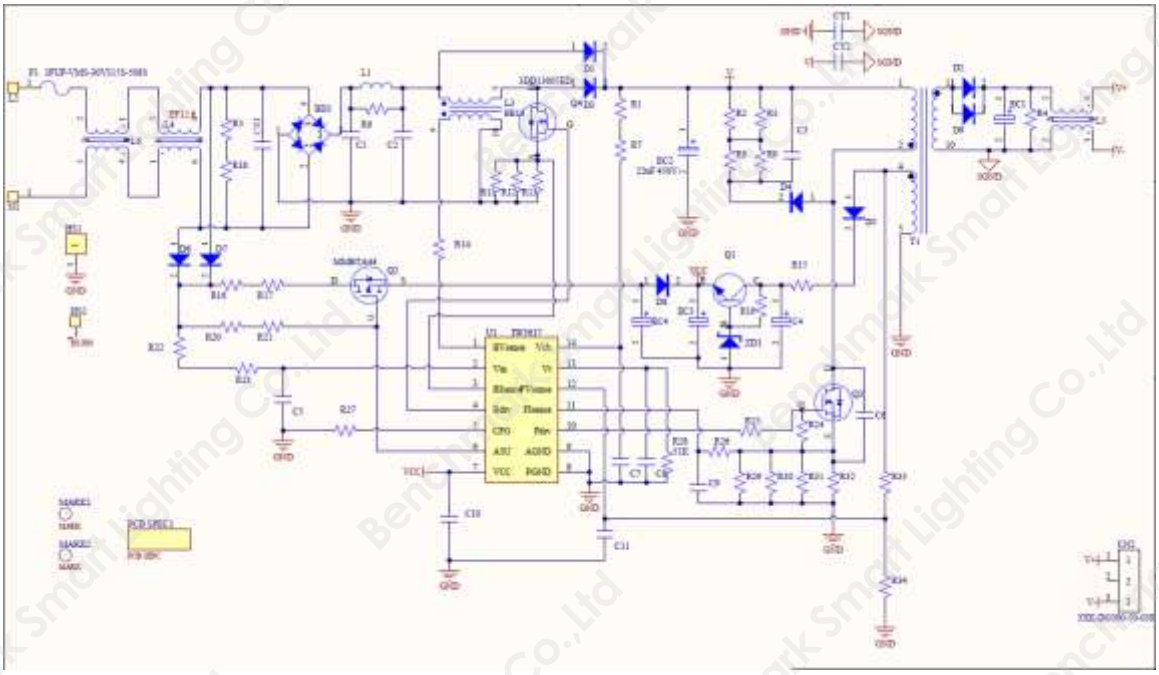

Circuit diagram for LED driver LD series

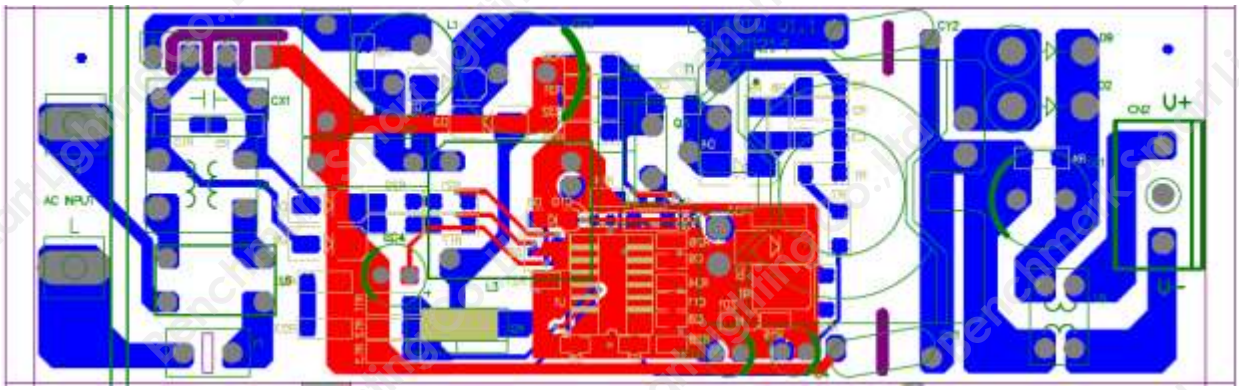

PCB layout for LED driver LD series

Annex PCB layout and circuit diagram

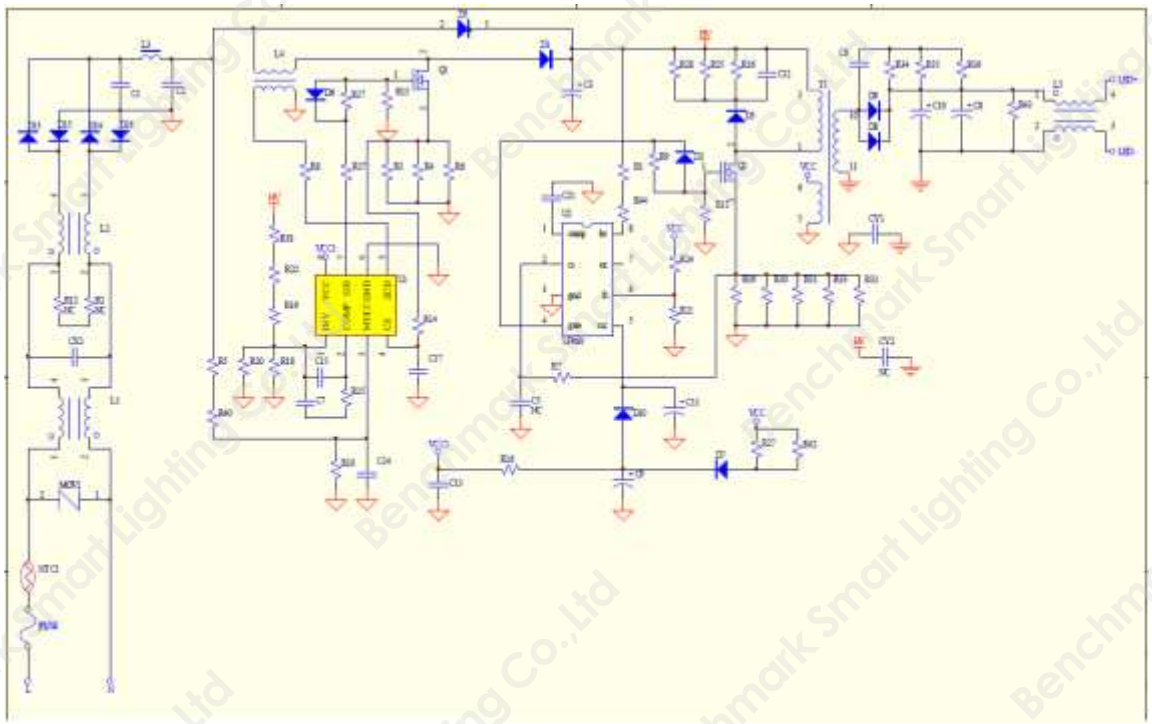

Circuit diagram for LED driver BK-PPL042 series

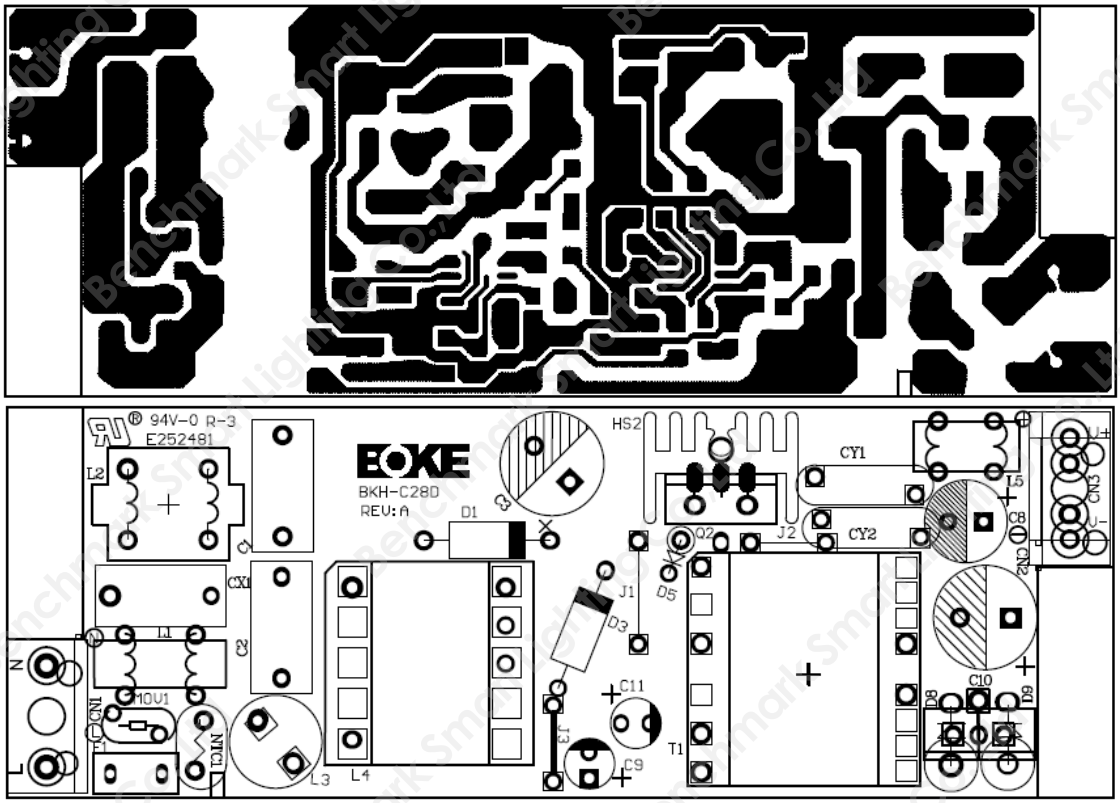

PCB layout for LED driver BK-PPL042 series

Annex model list

Model name	Max. power (W)	LED Driver	Dimension (mm)	Product picture
BM-PL05012	12	TGPC-IH25-42-B1-0300	Ø170	
BM-PL06012	12	TGPC-IH25-42-B1-0300	Ø180	
BM-PL07015	15	TGPC-IH25-42-B1-0350	Ø200	
BM-PL08018	18	TGPC-IH25-42-B1-0450	Ø225	
BM-PL08020	20	TGPC-IH25-42-B1-0500	Ø225	
BM-PL09020	20	TGPC-IH25-42-B1-0500	Ø240	
BM-PL09022	22	TGPC-IH25-42-B1-0550	Ø240	
BM-PL10024	24	TGPC-IH25-42-B1-0550	Ø300	
BM-PL10026	26	TGPC-IH25-42-B1-0600	Ø300	
BM-PL10028	28	TGPC-IH25-42-B1-0700	Ø300	
BM-PL10030	30	TGPC-IH25-42-B1-0750	Ø300	
BM-PL03005	5	BK-BEL030-0100	Ø85	
BM-PL03006	6	BK-BEL030-0150	Ø120	
BM-PL04009	9	BK-BEL030-0200	Ø145	
BM-PL04009	9	BK-BEL030-0200	Ø150	
BM-PL04010	10	BK-BEL030-0250	Ø150	
BM-PL05012	12	BK-BEL030-0300	Ø170	
BM-PL05012	12	BK-BEL030-0300	Ø175	
BM-PL06012	12	BK-BEL030-0300	Ø180	
BM-PL07015	15	BK-BEL030-0350	Ø200	
BM-PL08018	18	BK-BEL030-0450	Ø225	
BM-PL08020	20	BK-BEL030-0500	Ø225	
BM-PL09020	20	BK-BEL030-0500	Ø240	
BM-PL09022	22	BK-BEL030-0550	Ø240	
BM-PL10024	24	BK-BEL030-0600	Ø300	
BM-PL10026	26	BK-BEL030-0650	Ø300	
BM-PL10028	28	BK-BEL030-0700	Ø300	
BM-PL10030	30	BK-BEL030-0750	Ø300	
BM-PL03005	5	BK-PLL016-0100	Ø85	

Annex model list

BM-PL03006	6	BK-PLL016-0150	Ø120	
BM-PL04009	9	BK-PLL016-0200	Ø145	
BM-PL04009	9	BK-PLL016-0200	Ø150	
BM-PL04010	10	BK-PLL016-0250	Ø150	
BM-PL05012	12	BK-PLL016-0300	Ø170	
BM-PL05012	12	BK-PLL016-0300	Ø175	
BM-PL06012	12	BK-PLL016-0300	Ø180	
BM-PL07015	15	BK-PLL016-0350	Ø200	
BM-PL08018	18	BK-PLL022-0450	Ø225	
BM-PL08020	20	BK-PLL022-0500	Ø225	
BM-PL09020	20	BK-PLL022-0500	Ø240	
BM-PL09022	22	BK-PLL022-0550	Ø240	
BM-PL10024	24	BK-PLL022-0600	Ø300	
BM-PL10026	26	BK-PLL022-0650	Ø300	
BM-PL10028	28	BK-PLL022-0700	Ø300	
BM-PL10030	30	BK-PLL022-0750	Ø300	
BM-PL03005	5	BK-PUL010A-0250Ad	Ø85	
BM-PL03006	6	BK-PUL010A-0250Ad	Ø120	
BM-PL04009	9	BK-PUL010A-0250Ad	Ø145	
BM-PL04009	9	BK-PUL010A-0250Ad	Ø150	
BM-PL04010	10	BK-PUL010A-0250Ad	Ø150	
BM-PL05012	12	BK-PUL018A-0450Ad	Ø170	
BM-PL05012	12	BK-PUL018A-0450Ad	Ø175	
BM-PL06012	12	BK-PUL018A-0450Ad	Ø180	
BM-PL07015	15	BK-PUL018A-0450Ad	Ø200	
BM-PL08018	18	BK-PUL018A-0450Ad	Ø225	
BM-PL08020	20	BK-PUL018A-0450Ad	Ø225	
BM-PL09020	20	BK-PUL018A-0450Ad	Ø240	
BM-PL09022	22	BK-PUL030A-0700Ad	Ø240	
BM-PL10024	24	BK-PUL030A-0700Ad	Ø300	
BM-PL10026	26	BK-PUL030A-0700Ad	Ø300	
BM-PL10028	28	BK-PUL030A-0700Ad	Ø300	
BM-PL10030	30	BK-PUL042A-1100Ad	Ø300	
BM-PL03005	5	DL-7W300-LEF	Ø85	
BM-PL03006	6	DL-7W300-LEF	Ø120	
BM-PL04009	9	DL-12W300-LEF	Ø145	

Annex model list

BM-PL04009	9	DL-12W300-LEF	Ø150	
BM-PL04010	10	DL-12W300-LEF	Ø150	
BM-PL05012	12	DL-12W300-LEF	Ø170	
BM-PL05012	12	DL-12W300-LEF	Ø175	
BM-PL06012	12	DL-12W300-LEF	Ø180	
BM-PL07015	15	DL-20W450-LEF	Ø200	
BM-PL08018	18	DL-20W450-LEF	Ø225	
BM-PL08020	20	DL-20W450-LEF	Ø225	
BM-PL09020	20	DL-20W450-LEF	Ø240	
BM-PL09022	22	DL-20W550-LEF	Ø240	
BM-PL10024	24	DL-20W600-LEF	Ø300	
BM-PL10026	26	DL-30W600-LEF	Ø300	
BM-PL10028	28	DL-30W700-LEF	Ø300	
BM-PL10030	30	DL-40W750-LEF	Ø300	
BM-PL03005	5	LD005BC010W89ADA002	Ø85	
BM-PL03006	6	LD007BC015W89ADA002	Ø120	
BM-PL04009	9	LD009BC020W89ADA002	Ø145	
BM-PL04009	9	LD009BC020W89ADA002	Ø150	
BM-PL04010	10	LD011BC025W89ADA002	Ø150	
BM-PL05012	12	LD013BC030W89ADA002	Ø170	
BM-PL05012	12	LD013BC030W89ADA002	Ø175	
BM-PL06012	12	LD013BC030W89ADA002	Ø180	
BM-PL07015	15	LD015BC035W89ADA002	Ø200	
BM-PL08018	18	LD019BC045W89ADA002	Ø225	
BM-PL08020	20	LD021BC050W89ADA002	Ø225	
BM-PL09020	20	LD021BC050W89ADA002	Ø240	
BM-PL09022	22	LD023BC055W89ADA002	Ø240	
BM-PL10024	24	LD025BC060W89ADA002	Ø300	
BM-PL10026	26	LD025BC065W89ADA002	Ø300	
BM-PL10028	28	LD030BC070W89ADA002	Ø300	
BM-PL10030	30	LD030BC075W89ADA002	Ø300	
BM-PL09020	20	LC 21/500/42 fixC SR ADV2	Ø240	
BM-PL10024	24	LC 25/600/42 fixC SR ADV2	Ø300	
BM-PL10030	30	LC 30/700/42 fixC SR ADV2	Ø300	

Annex model list

BM-PL15012	12	TGPC-IH25-42-B1-0300	170x170	
BM-PL16012	12	TGPC-IH25-42-B1-0300	180x180	
BM-PL17015	15	TGPC-IH25-42-B1-0350	200x200	
BM-PL18018	18	TGPC-IH25-42-B1-0450	225x225	
BM-PL18020	20	TGPC-IH25-42-B1-0500	225x225	
BM-PL19020	20	TGPC-IH25-42-B1-0500	240x240	
BM-PL20024	24	TGPC-IH25-42-B1-0550	300x300	
BM-PL20026	26	TGPC-IH25-42-B1-0600	300x300	
BM-PL20028	28	TGPC-IH25-42-B1-0700	300x300	
BM-PL20030	30	TGPC-IH25-42-B1-0750	300x300	
BM-PL13005	5	BK-BEL030-0100	85x85	
BM-PL13006	6	BK-BEL030-0150	120x120	
BM-PL14009	9	BK-BEL030-0200	145x145	
BM-PL14009	9	BK-BEL030-0200	150x150	
BM-PL14010	10	BK-BEL030-0250	150x150	
BM-PL15012	12	BK-BEL030-0300	170x170	
BM-PL15012	12	BK-BEL030-0300	175x175	
BM-PL16012	12	BK-BEL030-0300	180x180	
BM-PL17015	15	BK-BEL030-0350	200x200	
BM-PL18018	18	BK-BEL030-0450	225x225	
BM-PL18020	20	BK-BEL030-0500	225x225	
BM-PL19020	20	BK-BEL030-0500	240x240	
BM-PL20024	24	BK-BEL030-0600	300x300	
BM-PL20026	26	BK-BEL030-0650	300x300	
BM-PL20028	28	BK-BEL030-0700	300x300	
BM-PL20030	30	BK-BEL030-0750	300x300	
BM-PL13005	5	BK-PLL016-0100	85x85	
BM-PL13006	6	BK-PLL016-0150	120x120	
BM-PL14009	9	BK-PLL016-0200	145x145	
BM-PL14009	9	BK-PLL016-0200	150x150	
BM-PL14010	10	BK-PLL016-0250	150x150	
BM-PL15012	12	BK-PLL016-0300	170x170	
BM-PL15012	12	BK-PLL016-0300	175x175	
BM-PL16012	12	BK-PLL016-0300	180x180	
BM-PL17015	15	BK-PLL016-0350	200x200	
BM-PL18018	18	BK-PLL022-0450	225x225	
BM-PL18020	20	BK-PLL022-0500	225x225	
BM-PL19020	20	BK-PLL022-0500	240x240	
BM-PL20024	24	BK-PLL022-0600	300x300	
BM-PL20026	26	BK-PLL040-0650	300x300	

Annex model list

BM-PL20028	28	BK-PLL040-0700	300x300	
BM-PL20030	30	BK-PLL040-0750	300x300	
BM-PL13005	5	BK-PUL010A-0250Ad	85x85	
BM-PL13006	6	BK-PUL010A-0250Ad	120x120	
BM-PL14009	9	BK-PUL010A-0250Ad	145x145	
BM-PL14009	9	BK-PUL010A-0250Ad	150x150	
BM-PL14010	10	BK-PUL010A-0250Ad	150x150	
BM-PL15012	12	BK-PUL018A-0450Ad	170x170	
BM-PL15012	12	BK-PUL018A-0450Ad	175x175	
BM-PL16012	12	BK-PUL018A-0450Ad	180x180	
BM-PL17015	15	BK-PUL018A-0450Ad	200x200	
BM-PL18018	18	BK-PUL018A-0450Ad	225x225	
BM-PL18020	20	BK-PUL018A-0450Ad	225x225	
BM-PL19020	20	BK-PUL018A-0450Ad	240x240	
BM-PL20024	24	BK-PUL030A-0700Ad	300x300	
BM-PL20026	26	BK-PUL030A-0700Ad	300x300	
BM-PL20028	28	BK-PUL030A-0700Ad	300x300	
BM-PL20030	30	BK-PUL042A-1100Ad	300x300	
BM-PL13005	5	DL-7W300-LEF	85x85	
BM-PL13006	6	DL-7W300-LEF	120x120	
BM-PL14009	9	DL-12W300-LEF	145x145	
BM-PL14009	9	DL-12W300-LEF	150x150	
BM-PL14010	10	DL-12W300-LEF	150x150	
BM-PL15012	12	DL-12W300-LEF	170x170	
BM-PL15012	12	DL-12W300-LEF	175x175	
BM-PL16012	12	DL-12W300-LEF	180x180	
BM-PL17015	15	DL-20W450-LEF	200x200	
BM-PL18018	18	DL-20W450-LEF	225x225	
BM-PL18020	20	DL-20W450-LEF	225x225	
BM-PL19020	20	DL-20W450-LEF	240x240	
BM-PL20024	24	DL-20W600-LEF	300x300	
BM-PL20026	26	DL-30W600-LEF	300x300	
BM-PL20028	28	DL-30W700-LEF	300x300	
BM-PL20030	30	DL-40W750-LEF	300x300	
BM-PL13005	5	LD005BC010W89ADA002	85x85	
BM-PL13006	6	LD007BC015W89ADA002	120x120	
BM-PL14009	9	LD009BC020W89ADA002	145x145	
BM-PL14009	9	LD009BC020W89ADA002	150x150	
BM-PL14010	10	LD011BC025W89ADA002	150x150	
BM-PL15012	12	LD013BC030W89ADA002	170x170	
BM-PL15012	12	LD013BC030W89ADA002	175x175	

Annex model list

BM-PL16012	12	LD013BC030W89ADA002	180x180	
BM-PL17015	15	LD015BC035W89ADA002	200x200	
BM-PL18018	18	LD019BC045W89ADA002	225x225	
BM-PL18020	20	LD021BC050W89ADA002	225x225	
BM-PL19020	20	LD021BC050W89ADA002	240x240	
BM-PL20024	24	LD025BC060W89ADA002	300x300	
BM-PL20026	26	LD025BC065W89ADA002	300x300	
BM-PL20028	28	LD030BC070W89ADA002	300x300	
BM-PL20030	30	LD030BC075W89ADA002	300x300	
BM-PL19020	20	LC 21/500/42 fixC SR ADV2	240x240	
BM-PL20024	24	LC 25/600/42 fixC SR ADV2	300x300	
BM-PL20030	30	LC 30/700/42 fixC SR ADV2	300x300	
BM-PL21012	12	TGPC-IH25-42-B1-0300	295x295	
BM-PL21015	15	TGPC-IH25-42-B1-0350	295x295	
BM-PL21018	18	TGPC-IH25-42-B1-0450	295x295	
BM-PL21020	20	TGPC-IH25-42-B1-0500	295x295	
BM-PL21012	12	BK-BEL030-0300	295x295	
BM-PL21015	15	BK-BEL030-0350	295x295	
BM-PL21018	18	BK-BEL030-0450	295x295	
BM-PL21020	20	BK-BEL030-0500	295x295	
BM-PL21012	12	BK-PLL016-0300	295x295	
BM-PL21015	15	BK-PLL016-0350	295x295	
BM-PL21018	18	BK-PLL022-0450	295x295	
BM-PL21020	20	BK-PLL022-0500	295x295	
BM-PL21012	12	BK-PUL018A-0450Ad	295x295	
BM-PL21015	15	BK-PUL018A-0450Ad	295x295	
BM-PL21018	18	BK-PUL018A-0450Ad	295x295	
BM-PL21020	20	BK-PUL018A-0450Ad	295x295	
BM-PL21012	12	DL-12W300-LEF	295x295	
BM-PL21015	15	DL-20W450-LEF	295x295	
BM-PL21018	18	DL-20W450-LEF	295x295	
BM-PL21020	20	DL-20W450-LEF	295x295	
BM-PL21012	12	LD013BC030W89ADA002	295x295	
BM-PL21015	15	LD015BC035W89ADA002	295x295	
BM-PL21018	18	LD019BC045W89ADA002	295x295	
BM-PL21020	20	LD021BC050W89ADA002	295x295	
BM-PL21020	20	LC 21/500/42 fixC SR ADV2	295x295	
BM-PL28020	20	TGPC-IH25-42-B1-0500	495x495	
BM-PL28024	24	TGPC-IH25-42-B1-0550	495x495	
BM-PL28026	26	TGPC-IH25-42-B1-0600	495x495	
BM-PL28028	28	TGPC-IH25-42-B1-0700	495x495	

Annex model list

BM-PL28030	30	TGPC-IH25-42-B1-0750	495x495	
BM-PL28032	32	TGPC-IH25-42-B1-0800	495x495	
BM-PL28036	36	TGPC-IH25-42-B1-0850	495x495	
BM-PL28040	40	TGPC-IH25-42-B1-0950	495x495	
BM-PL28020	20	BK-BEL030-0500	495x495	
BM-PL28024	24	BK-BEL030-0600	495x495	
BM-PL28026	26	BK-BEL030-0650	495x495	
BM-PL28028	28	BK-BEL030-0700	495x495	
BM-PL28030	30	BK-BEL030-0750	495x495	
BM-PL28032	32	BK-BEL042-0800	495x495	
BM-PL28036	36	BK-BEL042-0900	495x495	
BM-PL28040	40	BK-BEL042-1000	495x495	
BM-PL28020	20	BK-PLL022-0500	495x495	
BM-PL28024	24	BK-PLL022-0600	495x495	
BM-PL28026	26	BK-PLL040-0650	495x495	
BM-PL28028	28	BK-PLL040-0700	495x495	
BM-PL28030	30	BK-PLL040-0750	495x495	
BM-PL28032	32	BK-PLL040-0800	495x495	
BM-PL28036	36	BK-PLL040-0900	495x495	
BM-PL28040	40	BK-PLL040-1000	495x495	
BM-PL28020	20	BK-PUL018A-0450Ad	495x495	
BM-PL28024	24	BK-PUL030A-0700Ad	495x495	
BM-PL28026	26	BK-PUL030A-0700Ad	495x495	
BM-PL28028	28	BK-PUL030A-0700Ad	495x495	
BM-PL28030	30	BK-PUL042A-1100Ad	495x495	
BM-PL28032	32	BK-PUL042A-1100Ad	495x495	
BM-PL28036	36	BK-PUL042A-1100Ad	495x495	
BM-PL28040	40	BK-PUL042A-1100Ad	495x495	
BM-PL28020	20	DL-20W450-LEF	495x495	
BM-PL28024	24	DL-20W600-LEF	495x495	
BM-PL28026	26	DL-30W600-LEF	495x495	
BM-PL28028	28	DL-30W700-LEF	495x495	
BM-PL28030	30	DL-40W750-LEF	495x495	
BM-PL28032	32	DL-40W800-LEF	495x495	
BM-PL28036	36	DL-40W900-LEF	495x495	
BM-PL28040	40	DL-40W1A0-LEF	495x495	
BM-PL28020	20	LD021BC050W89ADA002	495x495	
BM-PL28024	24	LD025BC060W89ADA002	495x495	
BM-PL28026	26	LD025BC065W89ADA002	495x495	
BM-PL28028	28	LD030BC070W89ADA002	495x495	
BM-PL28030	30	LD030BC075W89ADA002	495x495	

Annex model list

BM-PL28032	32	LD032BC080W89ADA002	495x495	
BM-PL28036	36	LD040BC090W89ADA002	495x495	
BM-PL28040	40	LD042BC100W89ADA002	495x495	
BM-PL28020	20	LC 21/500/42 fixC SR ADV2	495x495	
BM-PL28024	24	LC 25/600/42 fixC SR ADV2	495x495	
BM-PL28028	28	LC 30/700/42 fixC SR ADV2	495x495	
BM-PL28032	32	LC 35/800/44 fixC SR ADV2	495x495	
BM-PL28036	36	LC 38/900/42 fixC SR ADV2	495x495	
BM-PL28042	42	LC 44/1050/42 fixC SR ADV2	495x495	
BM-PL23020	20	TGPC-IH40-42-B1-0500	595x595	
BM-PL23024	24	TGPC-IH40-42-B1-0550	595x595	
BM-PL23026	26	TGPC-IH40-42-B1-0600	595x595	
BM-PL23028	28	TGPC-IH40-42-B1-0700	595x595	
BM-PL23030	30	TGPC-IH40-42-B1-0750	595x595	
BM-PL23032	32	TGPC-IH40-42-B1-0800	595x595	
BM-PL23036	36	TGPC-IH40-42-B1-0850	595x595	
BM-PL23040	40	TGPC-IH40-42-B1-0950	595x595	
BM-PL23020	20	BK-BEL030-0500	595x595	
BM-PL23024	24	BK-BEL030-0600	595x595	
BM-PL23026	26	BK-BEL030-0650	595x595	
BM-PL23028	28	BK-BEL030-0700	595x595	
BM-PL23030	30	BK-BEL030-0750	595x595	
BM-PL23032	32	BK-BEL042-0800	595x595	
BM-PL23036	36	BK-BEL042-0900	595x595	
BM-PL23040	40	BK-BEL042-1000	595x595	
BM-PL23042	42	BK-BEL042-1050	595x595	
BM-PL23020	20	BK-PLL022-0500	595x595	
BM-PL23024	24	BK-PLL022-0600	595x595	
BM-PL23026	26	BK-PLL040-0650	595x595	
BM-PL23028	28	BK-PLL040-0700	595x595	
BM-PL23030	30	BK-PLL040-0750	595x595	
BM-PL23032	32	BK-PLL040-0800	595x595	
BM-PL23036	36	BK-PLL040-0900	595x595	
BM-PL23040	40	BK-PLL040-1000	595x595	
BM-PL23042	42	BK-PLL042-1050	595x595	
BM-PL23045	45	BK-PLL042-1100	595x595	
BM-PL23048	48	BK-PLL056-1200	595x595	
BM-PL23020	20	BK-PUL018A-0450Ad	595x595	
BM-PL23024	24	BK-PUL030A-0700Ad	595x595	
BM-PL23026	26	BK-PUL030A-0700Ad	595x595	
BM-PL23028	28	BK-PUL030A-0700Ad	595x595	

Annex model list

BM-PL23030	30	BK-PUL042A-1100Ad	595x595	
BM-PL23032	32	BK-PUL042A-1100Ad	595x595	
BM-PL23036	36	BK-PUL042A-1100Ad	595x595	
BM-PL23040	40	BK-PUL042A-1100Ad	595x595	
BM-PL23042	42	BK-PUL042A-1100Ad	595x595	
BM-PL23045	45	BK-PUL042A-1100Ad	595x595	
BM-PL23048	48	BK-PUL060A-2000Ad	595x595	
BM-PL23020	20	DL-20W450-LEF	595x595	
BM-PL23024	24	DL-20W600-LEF	595x595	
BM-PL23026	26	DL-30W600-LEF	595x595	
BM-PL23028	28	DL-30W700-LEF	595x595	
BM-PL23030	30	DL-40W750-LEF	595x595	
BM-PL23032	32	DL-40W800-LEF	595x595	
BM-PL23036	36	DL-40W900-LEF	595x595	
BM-PL23040	40	DL-40W1A0-LEF	595x595	
BM-PL23042	42	DL-40W1A05-LEF	595x595	
BM-PL23045	45	DL-50W1A1-LEF	595x595	
BM-PL23048	48	DL-50W1A15-LEF	595x595	
BM-PL23020	20	LD021BC050W89ADA002	595x595	
BM-PL23024	24	LD025BC060W89ADA002	595x595	
BM-PL23026	26	LD025BC065W89ADA002	595x595	
BM-PL23028	28	LD030BC070W89ADA002	595x595	
BM-PL23030	30	LD030BC075W89ADA002	595x595	
BM-PL23032	32	LD032BC080W89ADA002	595x595	
BM-PL23036	36	LD040BC090W89ADA002	595x595	
BM-PL23040	40	LD042BC100W89ADA002	595x595	
BM-PL23042	42	LD042BC100W89ADA002	595x595	
BM-PL23020	20	LC 21/500/42 fixC SR ADV2	595x595	
BM-PL23024	24	LC 25/600/42 fixC SR ADV2	595x595	
BM-PL23028	28	LC 30/700/42 fixC SR ADV2	595x595	
BM-PL23032	32	LC 35/800/44 fixC SR ADV2	595x595	
BM-PL23036	36	LC 38/900/42 fixC SR ADV2	595x595	
BM-PL23042	42	LC 44/1050/42 fixC SR ADV2	595x595	
BM-PL26020	20	TGPC-IH40-42-B1-0500	620x620	
BM-PL26024	24	TGPC-IH40-42-B1-0550	620x620	
BM-PL26026	26	TGPC-IH40-42-B1-0600	620x620	
BM-PL26028	28	TGPC-IH40-42-B1-0700	620x620	
BM-PL26030	30	TGPC-IH40-42-B1-0750	620x620	
BM-PL26032	32	TGPC-IH40-42-B1-0800	620x620	
BM-PL26036	36	TGPC-IH40-42-B1-0850	620x620	
BM-PL26040	40	TGPC-IH40-42-B1-0950	620x620	

Annex model list

BM-PL26042	42	TGPC-IH46-42-B1-1050	620x620	
BM-PL26045	45	TGPC-IH46-42-B1-1100	620x620	
BM-PL26020	20	BK-BEL030-0500	620x620	
BM-PL26024	24	BK-BEL030-0600	620x620	
BM-PL26026	26	BK-BEL030-0650	620x620	
BM-PL26028	28	BK-BEL030-0700	620x620	
BM-PL26030	30	BK-BEL030-0750	620x620	
BM-PL26032	32	BK-BEL042-0800	620x620	
BM-PL26036	36	BK-BEL042-0900	620x620	
BM-PL26040	40	BK-BEL042-1000	620x620	
BM-PL26042	42	BK-BEL042-1050	620x620	
BM-PL26020	20	BK-PLL022-0500	620x620	
BM-PL26024	24	BK-PLL022-0600	620x620	
BM-PL26026	26	BK-PLL040-0650	620x620	
BM-PL26028	28	BK-PLL040-0700	620x620	
BM-PL26030	30	BK-PLL040-0750	620x620	
BM-PL26032	32	BK-PLL040-0800	620x620	
BM-PL26036	36	BK-PLL040-0900	620x620	
BM-PL26040	40	BK-PLL040-1000	620x620	
BM-PL26042	42	BK-PLL042-1050	620x620	
BM-PL26045	45	BK-PLL042-1100	620x620	
BM-PL26048	48	BK-PLL056-1200	620x620	
BM-PL26050	50	BK-PLL056-1250	620x620	
BM-PL26060	60	BK-PLL056-1400	620x620	
BM-PL26020	20	BK-PUL018A-0450Ad	620x620	
BM-PL26024	24	BK-PUL030A-0700Ad	620x620	
BM-PL26026	26	BK-PUL030A-0700Ad	620x620	
BM-PL26028	28	BK-PUL030A-0700Ad	620x620	
BM-PL26030	30	BK-PUL042A-1100Ad	620x620	
BM-PL26032	32	BK-PUL042A-1100Ad	620x620	
BM-PL26036	36	BK-PUL042A-1100Ad	620x620	
BM-PL26040	40	BK-PUL042A-1100Ad	620x620	
BM-PL26042	42	BK-PUL042A-1100Ad	620x620	
BM-PL26045	45	BK-PUL042A-1100Ad	620x620	
BM-PL26048	48	BK-PUL060A-2000Ad	620x620	
BM-PL26050	50	BK-PUL060A-2000Ad	620x620	
BM-PL26060	60	BK-PUL060A-2000Ad	620x620	
BM-PL26020	20	DL-20W450-LEF	620x620	
BM-PL26024	24	DL-20W600-LEF	620x620	
BM-PL26026	26	DL-30W600-LEF	620x620	
BM-PL26028	28	DL-30W700-LEF	620x620	

Annex model list

BM-PL26030	30	DL-40W750-LEF	620x620	
BM-PL26032	32	DL-40W800-LEF	620x620	
BM-PL26036	36	DL-40W900-LEF	620x620	
BM-PL26040	40	DL-40W1A0-LEF	620x620	
BM-PL26042	42	DL-40W1A05-LEF	620x620	
BM-PL26045	45	DL-50W1A1-LEF	620x620	
BM-PL26048	48	DL-50W1A15-LEF	620x620	
BM-PL26050	50	DL-50W1A2-LEF	620x620	
BM-PL26020	20	LD021BC050W89ADA002	620x620	
BM-PL26024	24	LD025BC060W89ADA002	620x620	
BM-PL26026	26	LD025BC065W89ADA002	620x620	
BM-PL26028	28	LD030BC070W89ADA002	620x620	
BM-PL26030	30	LD030BC075W89ADA002	620x620	
BM-PL26032	32	LD032BC080W89ADA002	620x620	
BM-PL26036	36	LD040BC090W89ADA002	620x620	
BM-PL26040	40	LD042BC100W89ADA002	620x620	
BM-PL26042	42	LD042BC100W89ADA002	620x620	
BM-PL26020	20	LC 21/500/42 fixC SR ADV2	620x620	
BM-PL26024	24	LC 25/600/42 fixC SR ADV2	620x620	
BM-PL26028	28	LC 30/700/42 fixC SR ADV2	620x620	
BM-PL26032	32	LC 35/800/44 fixC SR ADV2	620x620	
BM-PL26036	36	LC 38/900/42 fixC SR ADV2	620x620	
BM-PL26042	42	LC 44/1050/42 fixC SR ADV2	620x620	
BM-PL29020	20	TGPC-IH40-42-B1-0500	600x600	
BM-PL29024	24	TGPC-IH40-42-B1-0550	600x600	
BM-PL29026	26	TGPC-IH40-42-B1-0600	600x600	
BM-PL29028	28	TGPC-IH40-42-B1-0700	600x600	
BM-PL29030	30	TGPC-IH40-42-B1-0750	600x600	
BM-PL29032	32	TGPC-IH40-42-B1-07800	600x600	
BM-PL29036	36	TGPC-IH40-42-B1-0850	600x600	
BM-PL29040	40	TGPC-IH40-42-B1-0950	600x600	
BM-PL29042	42	TGPC-IH46-42-B1-1050	600x600	
BM-PL29045	45	TGPC-IH46-42-B1-1100	600x600	
BM-PL29020	20	BK-BEL030-0500	600x600	
BM-PL29024	24	BK-BEL030-0600	600x600	
BM-PL29026	26	BK-BEL030-0650	600x600	
BM-PL29028	28	BK-BEL030-0700	600x600	
BM-PL29030	30	BK-BEL030-0750	600x600	
BM-PL29032	32	BK-BEL042-0800	600x600	
BM-PL29036	36	BK-BEL042-0900	600x600	
BM-PL29040	40	BK-BEL042-1000	600x600	

Annex model list

BM-PL29042	42	BK-BEL042-1050	600x600	
BM-PL29020	20	BK-PLL022-0500	600x600	
BM-PL29024	24	BK-PLL022-0600	600x600	
BM-PL29026	26	BK-PLL040-0650	600x600	
BM-PL29028	28	BK-PLL040-0700	600x600	
BM-PL29030	30	BK-PLL040-0750	600x600	
BM-PL29032	32	BK-PLL040-0800	600x600	
BM-PL29036	36	BK-PLL040-0900	600x600	
BM-PL29040	40	BK-PLL040-1000	600x600	
BM-PL29042	42	BK-PLL042-1050	600x600	
BM-PL29045	45	BK-PLL042-1100	600x600	
BM-PL29048	48	BK-PLL056-1200	600x600	
BM-PL29050	50	BK-PLL056-1250	600x600	
BM-PL29060	60	BK-PLL056-1400	600x600	
BM-PL29020	20	BK-PUL018A-0450Ad	600x600	
BM-PL29024	24	BK-PUL030A-0700Ad	600x600	
BM-PL29026	26	BK-PUL030A-0700Ad	600x600	
BM-PL29028	28	BK-PUL030A-0700Ad	600x600	
BM-PL29030	30	BK-PUL042A-1100Ad	600x600	
BM-PL29032	32	BK-PUL042A-1100Ad	600x600	
BM-PL29036	36	BK-PUL042A-1100Ad	600x600	
BM-PL29040	40	BK-PUL042A-1100Ad	600x600	
BM-PL29042	42	BK-PUL042A-1100Ad	600x600	
BM-PL29045	45	BK-PUL042A-1100Ad	600x600	
BM-PL29048	48	BK-PUL060A-2000Ad	600x600	
BM-PL29020	20	DL-20W450-LEF	600x600	
BM-PL29024	24	DL-20W600-LEF	600x600	
BM-PL29026	26	DL-30W600-LEF	600x600	
BM-PL29028	28	DL-30W700-LEF	600x600	
BM-PL29030	30	DL-40W750-LEF	600x600	
BM-PL29032	32	DL-40W800-LEF	600x600	
BM-PL29036	36	DL-40W900-LEF	600x600	
BM-PL29040	40	DL-40W1A0-LEF	600x600	
BM-PL29042	42	DL-40W1A05-LEF	600x600	
BM-PL29045	45	DL-50W1A1-LEF	600x600	
BM-PL29048	48	DL-50W1A15-LEF	600x600	
BM-PL29050	50	DL-50W1A2-LEF	600x600	
BM-PL29020	20	LD021BC050W89ADA002	600x600	
BM-PL29024	24	LD025BC060W89ADA002	600x600	
BM-PL29026	26	LD025BC065W89ADA002	600x600	
BM-PL29028	28	LD030BC070W89ADA002	600x600	

Annex model list

BM-PL29030	30	LD030BC075W89ADA002	600x600	
BM-PL29032	32	LD032BC080W89ADA002	600x600	
BM-PL29036	36	LD040BC090W89ADA002	600x600	
BM-PL29040	40	LD042BC100W89ADA002	600x600	
BM-PL29042	42	LD042BC100W89ADA002	600x600	
BM-PL29020	20	LC 21/500/42 fixC SR ADV2	600x600	
BM-PL29024	24	LC 25/600/42 fixC SR ADV2	600x600	
BM-PL29028	28	LC 30/700/42 fixC SR ADV2	600x600	
BM-PL29032	32	LC 35/800/44 fixC SR ADV2	600x600	
BM-PL29036	36	LC 38/900/42 fixC SR ADV2	600x600	
BM-PL29042	42	LC 44/1050/42 fixC SR ADV2	600x600	
BM-BPL81030	30	TGPC-IH40-42-B1-0750	595x595	
BM-BPL81032	32	TGPC-IH40-42-B1-0800	595x595	
BM-BPL81036	36	TGPC-IH40-42-B1-0850	595x595	
BM-BPL81040	40	TGPC-IH40-42-B1-0950	595x595	
BM-BPL81042	42	TGPC-IH46-42-B1-1050	595x595	
BM-BPL81045	45	TGPC-IH46-42-B1-1100	595x595	
BM-BPL81030	30	BK-BEL030-0750	595x595	
BM-BPL81032	32	BK-BEL042-0800	595x595	
BM-BPL81036	36	BK-BEL042-0900	595x595	
BM-BPL81040	40	BK-BEL042-1000	595x595	
BM-BPL81042	42	BK-BEL042-1050	595x595	
BM-BPL81030	30	BK-PLL040-0750	595x595	
BM-BPL81032	32	BK-PLL040-0800	595x595	
BM-BPL81036	36	BK-PLL040-0900	595x595	
BM-BPL81040	40	BK-PLL040-1000	595x595	
BM-BPL81042	42	BK-PLL042-1050	595x595	
BM-BPL81045	45	BK-PLL056-1150	595x595	
BM-BPL81048	48	BK-PLL056-1200	595x595	
BM-BPL81050	50	BK-PLL056-1250	595x595	
BM-BPL81030	30	BK-PUL042A-1100Ad	595x595	
BM-BPL81032	32	BK-PUL042A-1100Ad	595x595	
BM-BPL81036	36	BK-PUL042A-1100Ad	595x595	
BM-BPL81040	40	BK-PUL042A-1100Ad	595x595	
BM-BPL81042	42	BK-PUL042A-1100Ad	595x595	
BM-BPL81045	45	BK-PUL042A-1100Ad	595x595	
BM-BPL81048	48	BK-PUL060A-2000Ad	595x595	
BM-BPL81050	50	BK-PUL060A-2000Ad	595x595	
BM-BPL81030	30	DL-40W750-LEF	595x595	
BM-BPL81032	32	DL-40W800-LEF	595x595	
BM-BPL81036	36	DL-40W900-LEF	595x595	

Annex model list

BM-BPL81040	40	DL-40W1A0-LEF	595x595	
BM-BPL81042	42	DL-40W1A05-LEF	595x595	
BM-BPL81045	45	DL-40W1A1-LEF	595x595	
BM-BPL81048	48	DL-50W1A15-LEF	595x595	
BM-BPL81050	50	DL-50W1A2-LEF	595x595	
BM-BPL81030	30	LD030BC075W89ADA002	595x595	
BM-BPL81032	32	LD032BC080W89ADA002	595x595	
BM-BPL81036	36	LD040BC090W89ADA002	595x595	
BM-BPL81040	40	LD042BC100W89ADA002	595x595	
BM-BPL81042	42	LD042BC100W89ADA002	595x595	
BM-BPL81032	32	LC 35/800/44 fixC SR ADV2	595x595	
BM-BPL81036	36	LC 38/900/42 fixC SR ADV2	595x595	
BM-BPL81042	42	LC 44/1050/42 fixC SR ADV2	595x595	
BM-PL91024	24	PPL042-0600	595x595	
BM-PL91026	26	PPL042-0650	595x595	
BM-PL91028	28	PPL042-0700	595x595	
BM-PL91030	30	PPL042-0750	595x595	
BM-PL91032	32	PPL042-0800	595x595	
BM-PL91036	36	PPL042-0900	595x595	
BM-PL91040	40	PPL042-1000	595x595	
BM-PL22018	12	TGPC-IH25-42-B1-0300	295x595	
BM-PL22018	15	TGPC-IH25-42-B1-0350	295x595	
BM-PL22018	18	TGPC-IH25-42-B1-0450	295x595	
BM-PL22020	20	TGPC-IH25-42-B1-0450	295x595	
BM-PL22022	22	TGPC-IH25-42-B1-0500	295x595	
BM-PL22020	20	BK-BEL030-0500	295x595	
BM-PL22022	22	BK-BEL030-0550	295x595	
BM-PL22024	24	BK-BEL030-0600	295x595	
BM-PL22020	20	BK-PLL022-0500	295x595	
BM-PL22022	22	BK-PLL022-0550	295x595	
BM-PL22024	24	BK-PLL022-0600	295x595	
BM-PL22020	20	BK-PUL018A-0450Ad	295x595	
BM-PL22022	22	BK-PUL030A-0700Ad	295x595	
BM-PL22024	24	BK-PUL030A-0700Ad	295x595	
BM-PL22020	20	DL-20W450-LEF	295x595	
BM-PL22022	22	DL-20W550-LEF	295x595	
BM-PL22024	24	DL-20W600-LEF	295x595	
BM-PL22020	20	LD021BC050W89ADA002	295x595	
BM-PL22022	22	LD023BC055W89ADA002	295x595	
BM-PL22024	24	LD025BC060W89ADA002	295x595	
BM-PL22020	20	LC 21/500/42 fixC SR ADV2	295x595	

Annex model list

BM-PL22022	22	LC 21/500/42 fixC SR ADV2	295x595	
BM-PL22024	24	LC 25/600/42 fixC SR ADV2	295x595	
BM-PL24020	20	TGPC-IH40-42-B1-0500	295x1195	
BM-PL24024	24	TGPC-IH40-42-B1-0550	295x1195	
BM-PL24026	26	TGPC-IH40-42-B1-0600	295x1195	
BM-PL24028	28	TGPC-IH40-42-B1-0700	295x1195	
BM-PL24030	30	TGPC-IH40-42-B1-0750	295x1195	
BM-PL24032	32	TGPC-IH40-42-B1-0800	295x1195	
BM-PL24036	36	TGPC-IH40-42-B1-0850	295x1195	
BM-PL24040	40	TGPC-IH40-42-B1-0950	295x1195	
BM-PL24042	42	TGPC-IH46-42-B1-1050	295x1195	
BM-PL24045	45	TGPC-IH46-42-B1-1100	295x1195	
BM-PL24020	20	BK-BEL030-0500	295x1195	
BM-PL24024	24	BK-BEL030-0600	295x1195	
BM-PL24026	26	BK-BEL030-0650	295x1195	
BM-PL24028	28	BK-BEL030-0700	295x1195	
BM-PL24030	30	BK-BEL030-0750	295x1195	
BM-PL24032	32	BK-BEL042-0800	295x1195	
BM-PL24036	36	BK-BEL042-0900	295x1195	
BM-PL24040	40	BK-BEL042-1000	295x1195	
BM-PL24042	42	BK-BEL042-1050	295x1195	
BM-PL24020	20	BK-PLL022-0500	295x1195	
BM-PL24024	24	BK-PLL022-0600	295x1195	
BM-PL24026	26	BK-PLL040-0650	295x1195	
BM-PL24028	28	BK-PLL040-0700	295x1195	
BM-PL24030	30	BK-PLL040-0750	295x1195	
BM-PL24032	32	BK-PLL040-0800	295x1195	
BM-PL24036	36	BK-PLL040-0900	295x1195	
BM-PL24040	40	BK-PLL040-1000	295x1195	
BM-PL24042	42	BK-PLL042-1050	295x1195	
BM-PL24045	45	BK-PLL042-1100	295x1195	
BM-PL24048	48	BK-PLL056-1200	295x1195	
BM-PL24020	20	BK-PUL018A-0450Ad	295x1195	
BM-PL24024	24	BK-PUL030A-0700Ad	295x1195	
BM-PL24026	26	BK-PUL030A-0700Ad	295x1195	
BM-PL24028	28	BK-PUL030A-0700Ad	295x1195	
BM-PL24030	30	BK-PUL042A-1100Ad	295x1195	
BM-PL24032	32	BK-PUL042A-1100Ad	295x1195	
BM-PL24036	36	BK-PUL042A-1100Ad	295x1195	
BM-PL24040	40	BK-PUL042A-1100Ad	295x1195	
BM-PL24042	42	BK-PUL042A-1100Ad	295x1195	

Annex model list

BM-PL24045	45	BK-PUL042A-1100Ad	295x1195	
BM-PL24048	48	BK-PUL060A-2000Ad	295x1195	
BM-PL24020	20	DL-20W450-LEF	295x1195	
BM-PL24024	24	DL-20W600-LEF	295x1195	
BM-PL24026	26	DL-30W600-LEF	295x1195	
BM-PL24028	28	DL-30W700-LEF	295x1195	
BM-PL24030	30	DL-40W750-LEF	295x1195	
BM-PL24032	32	DL-40W800-LEF	295x1195	
BM-PL24036	36	DL-40W900-LEF	295x1195	
BM-PL24040	40	DL-40W1A0-LEF	295x1195	
BM-PL24042	42	DL-40W1A05-LEF	295x1195	
BM-PL24045	45	DL-50W1A1-LEF	295x1195	
BM-PL24048	48	DL-50W1A15-LEF	295x1195	
BM-PL24020	20	LD021BC050W89ADA002	295x1195	
BM-PL24024	24	LD025BC060W89ADA002	295x1195	
BM-PL24026	26	LD025BC065W89ADA002	295x1195	
BM-PL24028	28	LD030BC070W89ADA002	295x1195	
BM-PL24030	30	LD030BC075W89ADA002	295x1195	
BM-PL24032	32	LD032BC080W89ADA002	295x1195	
BM-PL24036	36	LD040BC090W89ADA002	295x1195	
BM-PL24040	40	LD042BC100W89ADA002	295x1195	
BM-PL24042	42	LD042BC100W89ADA002	295x1195	
BM-PL24020	20	LC 21/500/42 fixC SR ADV2	295x1195	
BM-PL24024	24	LC 25/600/42 fixC SR ADV2	295x1195	
BM-PL24026	26	LC 30/700/42 fixC SR ADV2	295x1195	
BM-PL24028	28	LC 30/700/42 fixC SR ADV2	295x1195	
BM-PL24030	30	LC 35/800/44 fixC SR ADV2	295x1195	
BM-PL24032	32	LC 35/800/44 fixC SR ADV2	295x1195	
BM-PL24036	36	LC 38/900/42 fixC SR ADV2	295x1195	
BM-PL24042	42	LC 44/1050/42 fixC SR ADV2	295x1195	
BM-PL25040	40	TGPC-IH40-42-B1-0950	595x1195	
BM-PL25040	45	TGPC-IH46-42-B1-1100	595x1195	
BM-PL25072	72	2xTGPC-IH40-42-B1-0850	595x1195	
BM-PL25080	80	2x TGPC-IH40-42-B1-0950	595x1195	
BM-PL25040	40	BK-BEL042-1000	595x1195	
BM-PL25042	42	BK-BEL042-1050	595x1195	
BM-PL25072	72	2x BK-BEL042-0900	595x1195	
BM-PL25080	80	2x BK-BEL042-1000	595x1195	
BM-PL25040	40	BK-PLL040-1000	595x1195	
BM-PL25045	45	BK-PLL042-1100	595x1195	
BM-PL25048	48	BK-PLL056-1200	595x1195	

Annex model list

BM-PL25050	50	BK-PLL056-1250	595x1195	
BM-PL25054	54	BK-PLL056-1350	595x1195	
BM-PL25060	60	BK-PLL056-1400	595x1195	
BM-PL25072	72	2x BK-PLL040-0900	595x1195	
BM-PL25080	80	2x BK-PLL040-1000	595x1195	
BM-PL25040	40	BK-PUL042A-1100Ad	595x1195	
BM-PL25045	45	BK-PUL042A-1100Ad	595x1195	
BM-PL25048	48	BK-PUL060A-2000Ad	595x1195	
BM-PL25050	50	BK-PUL060A-2000Ad	595x1195	
BM-PL25054	54	BK-PUL060A-2000Ad	595x1195	
BM-PL25060	60	BK-PUL060A-2000Ad	595x1195	
BM-PL25072	72	2x BK-PUL042A-1100Ad	595x1195	
BM-PL25080	80	2x BK-PUL042A-1100Ad	595x1195	
BM-PL25040	40	DL-40W1A0-LEF	595x1195	
BM-PL25045	45	DL-50W1A1-LEF	595x1195	
BM-PL25048	48	DL-50W1A15-LEF	595x1195	
BM-PL25050	50	DL-50W1A2-LEF	595x1195	
BM-PL25054	54	DL-50W1A2-LEF	595x1195	
BM-PL25072	72	2x DL-40W900-LEF	595x1195	
BM-PL25080	80	2x DL-40W1A0-LEF	595x1195	
BM-PL25040	40	LD042BC100W89ADA002	595x1195	
BM-PL25042	42	LD042BC100W89ADA002	595x1195	
BM-PL25072	72	2x LD040BC090W89ADA002	595x1195	
BM-PL25080	80	2x LD042BC100W89ADA002	595x1195	
BM-PL25042	42	LC 44/1050/42 fixC SR ADV2	595x1195	
BM-PL25072	72	2x LC 38/900/42 fixC SR ADV2	595x1195	
BM-PL25080	80	2x LC 44/1050/42 fixC SR ADV2	595x1195	
BM-BPL82024	24	TGPC-IH25-42-B1-0550	295x1195	
BM-BPL82026	26	TGPC-IH25-42-B1-0600	295x1195	
BM-BPL82028	28	TGPC-IH40-42-B1-0700	295x1195	
BM-BPL82030	30	TGPC-IH40-42-B1-0750	295x1195	
BM-BPL82032	32	TGPC-IH40-42-B1-0800	295x1195	
BM-BPL82036	36	TGPC-IH40-42-B1-0850	295x1195	
BM-BPL82040	40	TGPC-IH40-42-B1-0950	295x1195	
BM-BPL82024	24	BK-BEL030-0600	295x1195	
BM-BPL82026	26	BK-BEL030-0650	295x1195	
BM-BPL82028	28	BK-BEL030-0700	295x1195	
BM-BPL82030	30	BK-BEL030-0750	295x1195	
BM-BPL82032	32	BK-BEL042-0800	295x1195	
BM-BPL82036	36	BK-BEL042-0900	295x1195	
BM-BPL82040	40	BK-BEL042-1000	295x1195	

Annex model list

BM-BPL83072	72	2x BK-BEL042-0900	295x1195	
BM-BPL83080	80	2x BK-BEL042-1000	295x1195	
BM-BPL82024	24	BK-PLL022-0600	295x1195	
BM-BPL82026	26	BK-PLL040-0650	295x1195	
BM-BPL82028	28	BK-PLL040-0700	295x1195	
BM-BPL82030	30	BK-PLL040-0750	295x1195	
BM-BPL82032	32	BK-PLL040-0800	295x1195	
BM-BPL82036	36	BK-PLL040-0900	295x1195	
BM-BPL82040	40	BK-PLL040-1000	295x1195	
BM-BPL82045	45	BK-PLL056-1150	295x1195	
BM-BPL82048	48	BK-PLL056-1200	295x1195	
BM-BPL82050	50	BK-PLL056-1250	295x1195	
BM-BPL82024	24	BK-PUL030A-0700Ad	295x1195	
BM-BPL82026	26	BK-PUL030A-0700Ad	295x1195	
BM-BPL82028	28	BK-PUL030A-0700Ad	295x1195	
BM-BPL82030	30	BK-PUL042A-1100Ad	295x1195	
BM-BPL82032	32	BK-PUL042A-1100Ad	295x1195	
BM-BPL82036	36	BK-PUL042A-1100Ad	295x1195	
BM-BPL82040	40	BK-PUL042A-1100Ad	295x1195	
BM-BPL82045	45	BK-PUL042A-1100Ad	295x1195	
BM-BPL82048	48	BK-PUL060A-2000Ad	295x1195	
BM-BPL82050	50	BK-PUL060A-2000Ad	295x1195	
BM-BPL82024	24	DL-20W600-LEF	295x1195	
BM-BPL82026	26	DL-30W600-LEF	295x1195	
BM-BPL82028	28	DL-30W650-LEF	295x1195	
BM-BPL82030	30	DL-40W750-LEF	295x1195	
BM-BPL82032	32	DL-40W800-LEF	295x1195	
BM-BPL82036	36	DL-40W900-LEF	295x1195	
BM-BPL82040	40	DL-40W1A0-LEF	295x1195	
BM-BPL82045	45	DL-40W1A1-LEF	295x1195	
BM-BPL82048	48	DL-50W1A15-LEF	295x1195	
BM-BPL82050	50	DL-50W1A2-LEF	295x1195	
BM-BPL82024	24	LD025BC060W89ADA002	295x1195	
BM-BPL82026	26	LD025BC065W89ADA002	295x1195	
BM-BPL82028	28	LD030BC070W89ADA002	295x1195	
BM-BPL82030	30	LD030BC075W89ADA002	295x1195	
BM-BPL82032	32	LD032BC080W89ADA002	295x1195	
BM-BPL82036	36	LD040BC090W89ADA002	295x1195	
BM-BPL82040	40	LD042BC100W89ADA002	295x1195	
BM-BPL82024	24	LC 25/600/42 fixC SR ADV2	295x1195	
BM-BPL82028	28	LC 30/700/42 fixC SR ADV2	295x1195	

Annex model list

BM-BPL82032	32	LC 35/800/44 fixC SR ADV2	295x1195	
BM-BPL82036	36	LC 38/900/42 fixC SR ADV2	295x1195	
BM-BPL82042	42	LC 44/1050/42 fixC SR ADV2	295x1195	
BM-BPL83040	40	TGPC-IH40-42-B1-0950	595x1195	
BM-BPL83072	72	2x TGPC-IH40-42-B1-0850	595x1195	
BM-BPL83080	80	2x TGPC-IH40-42-B1-0950	595x1195	
BM-BPL83040	40	BK-BEL042-1000	595x1195	
BM-BPL83040	40	BK-PLL040-1000	595x1195	
BM-BPL83045	45	BK-PLL056-1150	595x1195	
BM-BPL83048	48	BK-PLL056-1200	595x1195	
BM-BPL83050	50	BK-PLL056-1250	595x1195	
BM-BPL83054	54	BK-PLL056-1350	595x1195	
BM-BPL83060	60	BK-PLL056-1400	595x1195	
BM-BPL83072	72	2x BK-PLL040-0900	595x1195	
BM-BPL83080	80	2x BK-PLL040-1000	595x1195	
BM-BPL83040	40	BK-PUL042A-1100Ad	595x1195	
BM-BPL83045	45	BK-PUL042A-1100Ad	595x1195	
BM-BPL83048	48	BK-PUL060A-2000Ad	595x1195	
BM-BPL83050	50	BK-PUL060A-2000Ad	595x1195	
BM-BPL83054	54	BK-PUL060A-2000Ad	595x1195	
BM-BPL83060	60	BK-PUL060A-2000Ad	595x1195	
BM-BPL83072	72	BK-PUL042A-1100Ad	595x1195	
BM-BPL83080	80	BK-PUL042A-1100Ad	595x1195	
BM-BPL83040	40	DL-40W1A0-LEF	595x1195	
BM-BPL83045	45	DL-40W1A1-LEF	595x1195	
BM-BPL83048	48	DL-50W1A15-LEF	595x1195	
BM-BPL83050	50	DL-50W1A2-LEF	595x1195	
BM-BPL83054	54	DL-50W1A2-LEF	595x1195	
BM-BPL83072	72	2x DL-40W900-LEF	595x1195	
BM-BPL83080	80	2x DL-40W1A0-LEF	595x1195	
BM-BPL83040	40	LD042BC100W89ADA002	595x1195	
BM-BPL83042	42	LD042BC100W89ADA002	595x1195	
BM-BPL83072	72	2x LD040BC090W89ADA002	595x1195	
BM-BPL83080	80	2x LD042BC100W89ADA002	595x1195	
BM-BPL83042	42	LC 44/1050/42 fixC SR ADV2	595x1195	
BM-BPL83072	72	2x LC 38/900/42 fixC SR ADV2	595x1195	
BM-BPL83080	80	2x LC 44/1050/42 fixC SR ADV2	595x1195	
BM-PL92024	24	PPL042-0600	295x1195	
BM-PL92026	26	PPL042-0650	295x1195	
BM-PL92028	28	PPL042-0700	295x1195	
BM-PL92030	30	PPL042-0750	295x1195	

Annex model list

BM-PL92032	32	PPL042-0800	295x1195	
BM-PL92036	36	PPL042-0900	295x1195	
BM-PL92040	40	PPL042-1000	295x1195	
BM-TPL31012	12	TGPC-IH25-42-B1-0300	Φ200	
BM-TPL32013	13	TGPC-IH25-42-B1-0300	Φ300	
BM-TPL32015	15	TGPC-IH25-42-B1-0350	Φ300	
BM-TPL32018	18	TGPC-IH25-42-B1-0450	Φ300	
BM-TPL33016	16	TGPC-IH25-42-B1-0400	Φ400	
BM-TPL33018	18	TGPC-IH25-42-B1-0450	Φ400	
BM-TPL33020	20	TGPC-IH25-42-B1-0450	Φ400	
BM-TPL33022	22	TGPC-IH25-42-B1-0500	Φ400	
BM-TPL34025	25	TGPC-IH25-42-B1-0600	Φ500	
BM-TPL34026	26	TGPC-IH25-42-B1-0600	Φ500	
BM-TPL34028	28	TGPC-IH25-42-B1-0700	Φ500	
BM-TPL34030	30	TGPC-IH25-42-B1-0750	Φ500	
BM-TPL34036	36	TGPC-IH25-42-B1-0850	Φ500	
BM-TPL34040	40	TGPC-IH25-42-B1-0950	Φ500	
BM-TPL35040	26	TGPC-IH25-42-B1-0600	Φ600	
BM-TPL35040	28	TGPC-IH25-42-B1-0700	Φ600	
BM-TPL35030	30	TGPC-IH40-42-B1-0750	Φ600	
BM-TPL35032	32	TGPC-IH40-42-B1-0800	Φ600	
BM-TPL35036	36	TGPC-IH40-42-B1-0850	Φ600	
BM-TPL35040	40	TGPC-IH40-42-B1-0950	Φ600	
BM-TPL31012	12	BK-BEL030-0300	Φ200	
BM-TPL32013	13	BK-BEL030-0300	Φ300	
BM-TPL32015	15	BK-BEL030-0350	Φ300	
BM-TPL32018	18	BK-BEL030-0450	Φ300	
BM-TPL33016	16	BK-BEL030-0400	Φ400	
BM-TPL33018	18	BK-BEL030-0450	Φ400	
BM-TPL33020	20	BK-BEL030-0500	Φ400	
BM-TPL33022	22	BK-BEL030-0550	Φ400	
BM-TPL34025	25	BK-BEL030-0600	Φ500	
BM-TPL34026	26	BK-BEL030-0650	Φ500	
BM-TPL34028	28	BK-BEL030-0700	Φ500	
BM-TPL34030	30	BK-BEL030-0750	Φ500	
BM-TPL34036	36	BK-BEL042-0900	Φ500	
BM-TPL34040	40	BK-BEL042-1000	Φ500	
BM-TPL35026	26	BK-BEL030-0650	Φ600	
BM-TPL35028	28	BK-BEL030-0700	Φ600	
BM-TPL35030	30	BK-BEL030-0750	Φ600	
BM-TPL35032	32	BK-BEL042-0800	Φ600	

Annex model list

BM-TPL35036	36	BK-BEL042-0900	Φ600	
BM-TPL35040	40	BK-BEL042-1000	Φ600	
BM-TPL31012	12	BK-PLL016-0300	Φ200	
BM-TPL32013	13	BK-PLL016-0300	Φ300	
BM-TPL32015	15	BK-PLL016-0350	Φ300	
BM-TPL32018	18	BK-PLL022-0450	Φ300	
BM-TPL33016	16	BK-PLL022-0450	Φ400	
BM-TPL33018	18	BK-PLL022-0450	Φ400	
BM-TPL33020	20	BK-PLL022-0500	Φ400	
BM-TPL33022	22	BK-PLL022-0550	Φ400	
BM-TPL34025	25	BK-PLL022-0600	Φ500	
BM-TPL34026	26	BK-PLL040-0650	Φ500	
BM-TPL34028	28	BK-PLL040-0700	Φ500	
BM-TPL34030	30	BK-PLL040-0750	Φ500	
BM-TPL34036	36	BK-PLL040-0900	Φ500	
BM-TPL34040	40	BK-PLL040-1000	Φ500	
BM-TPL35026	26	BK-PLL040-0650	Φ600	
BM-TPL35028	28	BK-PLL040-0700	Φ600	
BM-TPL35030	30	BK-PLL040-0750	Φ600	
BM-TPL35032	32	BK-PLL040-0800	Φ600	
BM-TPL35036	36	BK-PLL040-0900	Φ600	
BM-TPL35040	40	BK-PLL040-1000	Φ600	
BM-TPL31012	12	BK-PUL018A-0450Ad	Φ200	
BM-TPL32013	13	BK-PUL018A-0450Ad	Φ300	
BM-TPL32015	15	BK-PUL018A-0450Ad	Φ300	
BM-TPL32018	18	BK-PUL018A-0450Ad	Φ300	
BM-TPL33016	16	BK-PUL018A-0450Ad	Φ400	
BM-TPL33018	18	BK-PUL018A-0450Ad	Φ400	
BM-TPL33020	20	BK-PUL018A-0450Ad	Φ400	
BM-TPL33022	22	BK-PUL030A-0700Ad	Φ400	
BM-TPL34025	25	BK-PUL030A-0700Ad	Φ500	
BM-TPL34026	26	BK-PUL030A-0700Ad	Φ500	
BM-TPL34028	28	BK-PUL030A-0700Ad	Φ500	
BM-TPL34030	30	BK-PUL042A-1100Ad	Φ500	
BM-TPL34036	36	BK-PUL042A-1100Ad	Φ500	
BM-TPL34040	40	BK-PUL042A-1100Ad	Φ500	
BM-TPL35026	26	BK-PUL030A-0700Ad	Φ600	
BM-TPL35028	28	BK-PUL030A-0700Ad	Φ600	
BM-TPL35030	30	BK-PUL042A-1100Ad	Φ600	
BM-TPL35032	32	BK-PUL042A-1100Ad	Φ600	
BM-TPL35036	36	BK-PUL042A-1100Ad	Φ600	

Annex model list

BM-TPL35040	40	BK-PUL042A-1100Ad	Φ600	
BM-TPL31012	12	DL-12W300-LEF	Φ200	
BM-TPL32013	13	DL-12W300-LEF	Φ300	
BM-TPL32015	15	DL-20W450-LEF	Φ300	
BM-TPL32018	18	DL-20W450-LEF	Φ300	
BM-TPL33016	16	DL-20W450-LEF	Φ400	
BM-TPL33018	18	DL-20W450-LEF	Φ400	
BM-TPL33020	20	DL-20W450-LEF	Φ400	
BM-TPL33022	22	DL-20W450-LEF	Φ400	
BM-TPL34025	25	DL-20W600-LEF	Φ500	
BM-TPL34026	26	DL-30W600-LEF	Φ500	
BM-TPL34028	28	DL-30W650-LEF	Φ500	
BM-TPL34030	30	DL-40W750-LEF	Φ500	
BM-TPL34036	36	DL-40W900-LEF	Φ500	
BM-TPL34040	40	DL-40W1A0-LEF	Φ500	
BM-TPL35026	26	DL-30W600-LEF	Φ600	
BM-TPL35028	28	DL-30W700-LEF	Φ600	
BM-TPL35030	30	DL-40W750-LEF	Φ600	
BM-TPL35032	32	DL-40W800-LEF	Φ600	
BM-TPL35036	36	DL-40W900-LEF	Φ600	
BM-TPL35040	40	DL-40W1A0-LEF	Φ600	
BM-TPL31012	12	LD013BC030W89ADA002	Φ200	
BM-TPL32013	13	LD013BC030W89ADA002	Φ300	
BM-TPL32015	15	LD015BC035W89ADA002	Φ300	
BM-TPL32018	18	LD019BC045W89ADA002	Φ300	
BM-TPL33016	16	LD019BC045W89ADA002	Φ400	
BM-TPL33018	18	LD019BC045W89ADA002	Φ400	
BM-TPL33020	20	LD021BC050W89ADA002	Φ400	
BM-TPL33022	22	LD023BC055W89ADA002	Φ400	
BM-TPL34025	25	LD025BC060W89ADA002	Φ500	
BM-TPL34026	26	LD025BC065W89ADA002	Φ500	
BM-TPL34028	28	LD030BC070W89ADA002	Φ500	
BM-TPL34030	30	LD030BC075W89ADA002	Φ500	
BM-TPL34036	36	LD040BC090W89ADA002	Φ500	
BM-TPL34040	40	LD042BC100W89ADA002	Φ500	
BM-TPL35026	26	LD025BC065W89ADA002	Φ600	
BM-TPL35028	28	LD030BC070W89ADA002	Φ600	
BM-TPL35030	30	LD030BC075W89ADA002	Φ600	
BM-TPL35032	32	LD032BC080W89ADA002	Φ600	
BM-TPL35036	36	LD040BC090W89ADA002	Φ600	
BM-TPL35040	40	LD042BC100W89ADA002	Φ600	

Annex model list

BM-TPL33020	20	LC 21/500/42 fixC SR ADV2	Φ400	
BM-TPL34025	25	LC 25/600/42 fixC SR ADV2	Φ500	
BM-TPL34028	28	LC 30/700/42 fixC SR ADV2	Φ500	
BM-TPL34032	32	LC 35/800/44 fixC SR ADV2	Φ500	
BM-TPL34036	36	LC 38/900/42 fixC SR ADV2	Φ500	
BM-TPL34042	42	LC 44/1050/42 fixC SR ADV2	Φ500	
BM-TPL35028	28	LC 30/700/42 fixC SR ADV2	Φ600	
BM-TPL35032	32	LC 35/800/44 fixC SR ADV2	Φ600	
BM-TPL35036	36	LC 38/900/42 fixC SR ADV2	Φ600	
BM-TPL35042	42	LC 44/1050/42 fixC SR ADV2	Φ600	
BM-TPL41012	12	TGPC-IH25-42-B1-0300	200x200	
BM-TPL42013	13	TGPC-IH25-42-B1-0300	300x300	
BM-TPL42015	15	TGPC-IH25-42-B1-0350	300x300	
BM-TPL42018	18	TGPC-IH25-42-B1-0450	300x300	
BM-TPL43016	16	TGPC-IH25-42-B1-0400	400x400	
BM-TPL43018	18	TGPC-IH25-42-B1-0450	400x400	
BM-TPL43020	20	TGPC-IH25-42-B1-0500	400x400	
BM-TPL43022	22	TGPC-IH25-42-B1-0550	400x400	
BM-TPL44025	25	TGPC-IH25-42-B1-0600	500x500	
BM-TPL44025	26	TGPC-IH25-42-B1-0600	500x500	
BM-TPL44025	28	TGPC-IH25-42-B1-0700	500x500	
BM-TPL44025	30	TGPC-IH25-42-B1-0750	500x500	
BM-TPL44025	32	TGPC-IH25-42-B1-0800	500x500	
BM-TPL44025	36	TGPC-IH25-42-B1-0850	500x500	
BM-TPL44025	40	TGPC-IH25-42-B1-0950	500x500	
BM-TPL45026	26	TGPC-IH25-42-B1-0600	600x600	
BM-TPL45028	28	TGPC-IH25-42-B1-0700	600x600	
BM-TPL45030	30	TGPC-IH40-42-B1-0750	600x600	
BM-TPL45032	32	TGPC-IH40-42-B1-0800	600x600	
BM-TPL45036	36	TGPC-IH40-42-B1-0850	600x600	
BM-TPL45040	40	TGPC-IH40-42-B1-0950	600x600	
BM-TPL41012	12	BK-BEL030-0300	200x200	
BM-TPL42013	13	BK-BEL030-0300	300x300	
BM-TPL42015	15	BK-BEL030-0350	300x300	
BM-TPL42018	18	BK-BEL030-0450	300x300	
BM-TPL43016	16	BK-BEL030-0400	400x400	
BM-TPL43018	18	BK-BEL030-0450	400x400	
BM-TPL43020	20	BK-BEL030-0500	400x400	
BM-TPL43022	22	BK-BEL030-0550	400x400	
BM-TPL44025	25	BK-BEL030-0600	500x500	
BM-TPL44026	26	BK-BEL030-0650	500x500	

Annex model list

BM-TPL44028	28	BK-BEL030-0700	500x500	
BM-TPL44030	30	BK-BEL030-0750	500x500	
BM-TPL44032	32	BK-BEL042-0800	500x500	
BM-TPL44036	36	BK-BEL042-0900	500x500	
BM-TPL44040	40	BK-BEL042-1000	500x500	
BM-TPL45026	26	BK-BEL030-0650	600x600	
BM-TPL45028	28	BK-BEL030-0700	600x600	
BM-TPL45030	30	BK-BEL030-0750	600x600	
BM-TPL45032	32	BK-BEL042-0800	600x600	
BM-TPL45036	36	BK-BEL042-0900	600x600	
BM-TPL45040	40	BK-BEL042-1000	600x600	
BM-TPL41012	12	BK-PLL016-0300	200x200	
BM-TPL42013	13	BK-PLL016-0300	300x300	
BM-TPL42015	15	BK-PLL016-0350	300x300	
BM-TPL42018	18	BK-PLL022-0450	300x300	
BM-TPL43016	16	BK-PLL022-0450	400x400	
BM-TPL43018	18	BK-PLL022-0450	400x400	
BM-TPL43020	20	BK-PLL022-0500	400x400	
BM-TPL43022	22	BK-PLL022-0550	400x400	
BM-TPL44025	25	BK-PLL022-0600	500x500	
BM-TPL44026	26	BK-PLL040-0650	500x500	
BM-TPL44028	28	BK-PLL040-0700	500x500	
BM-TPL44030	30	BK-PLL040-0750	500x500	
BM-TPL44032	32	BK-PLL040-0800	500x500	
BM-TPL44036	36	BK-PLL040-0900	500x500	
BM-TPL44040	40	BK-PLL040-1000	500x500	
BM-TPL45026	26	BK-PLL040-0650	600x600	
BM-TPL45028	28	BK-PLL040-0700	600x600	
BM-TPL45030	30	BK-PLL040-0750	600x600	
BM-TPL45032	32	BK-PLL040-0800	600x600	
BM-TPL45036	36	BK-PLL040-0900	600x600	
BM-TPL45040	40	BK-PLL040-1000	600x600	
BM-TPL41012	12	BK-PUL018A-0450Ad	200x200	
BM-TPL42013	13	BK-PUL018A-0450Ad	300x300	
BM-TPL42015	15	BK-PUL018A-0450Ad	300x300	
BM-TPL42018	18	BK-PUL018A-0450Ad	300x300	
BM-TPL43016	16	BK-PUL018A-0450Ad	400x400	
BM-TPL43018	18	BK-PUL018A-0450Ad	400x400	
BM-TPL43020	20	BK-PUL018A-0450Ad	400x400	
BM-TPL43022	22	BK-PUL030A-0700Ad	400x400	
BM-TPL44025	25	BK-PUL030A-0700Ad	500x500	

Annex model list

BM-TPL44026	26	BK-PUL030A-0700Ad	500x500	
BM-TPL44028	28	BK-PUL030A-0700Ad	500x500	
BM-TPL44030	30	BK-PUL042A-1100Ad	500x500	
BM-TPL44032	32	BK-PUL042A-1100Ad	500x500	
BM-TPL44036	36	BK-PUL042A-1100Ad	500x500	
BM-TPL44040	40	BK-PUL042A-1100Ad	500x500	
BM-TPL45026	26	BK-PUL030A-0700Ad	600x600	
BM-TPL45028	28	BK-PUL030A-0700Ad	600x600	
BM-TPL45030	30	BK-PUL042A-1100Ad	600x600	
BM-TPL45032	32	BK-PUL042A-1100Ad	600x600	
BM-TPL45036	36	BK-PUL042A-1100Ad	600x600	
BM-TPL45040	40	BK-PUL042A-1100Ad	600x600	
BM-TPL41012	12	DL-12W300-LEF	200x200	
BM-TPL42013	13	DL-12W300-LEF	300x300	
BM-TPL42015	15	DL-20W450-LEF	300x300	
BM-TPL42018	18	DL-20W450-LEF	300x300	
BM-TPL43016	16	DL-20W450-LEF	400x400	
BM-TPL43018	18	DL-20W450-LEF	400x400	
BM-TPL43020	20	DL-20W450-LEF	400x400	
BM-TPL43022	22	DL-20W450-LEF	400x400	
BM-TPL44025	25	DL-20W600-LEF	500x500	
BM-TPL44026	26	DL-30W600-LEF	500x500	
BM-TPL44028	28	DL-30W700-LEF	500x500	
BM-TPL44030	30	DL-40W750-LEF	500x500	
BM-TPL44032	32	DL-40W800-LEF	500x500	
BM-TPL44036	36	DL-40W900-LEF	500x500	
BM-TPL44040	40	DL-40W1A0-LEF	500x500	
BM-TPL45026	26	DL-30W600-LEF	600x600	
BM-TPL45028	28	DL-30W700-LEF	600x600	
BM-TPL45030	30	DL-40W750-LEF	600x600	
BM-TPL45032	32	DL-40W800-LEF	600x600	
BM-TPL45036	36	DL-40W900-LEF	600x600	
BM-TPL45040	40	DL-40W1A0-LEF	600x600	
BM-TPL41012	12	LD013BC030W89ADA002	200x200	
BM-TPL42013	13	LD013BC030W89ADA002	300x300	
BM-TPL42015	15	LD015BC035W89ADA002	300x300	
BM-TPL42018	18	LD019BC045W89ADA002	300x300	
BM-TPL43016	16	LD019BC045W89ADA002	400x400	
BM-TPL43018	18	LD019BC045W89ADA002	400x400	
BM-TPL43020	20	LD021BC050W89ADA002	400x400	
BM-TPL43022	22	LD023BC055W89ADA002	400x400	

Annex model list

BM-TPL44025	25	LD025BC060W89ADA002	500x500	
BM-TPL44026	26	LD025BC065W89ADA002	500x500	
BM-TPL44028	28	LD030BC070W89ADA002	500x500	
BM-TPL44030	30	LD030BC075W89ADA002	500x500	
BM-TPL44032	32	LD032BC080W89ADA002	500x500	
BM-TPL44036	36	LD040BC090W89ADA002	500x500	
BM-TPL44040	40	LD042BC100W89ADA002	500x500	
BM-TPL45026	26	LD025BC065W89ADA002	600x600	
BM-TPL45028	28	LD030BC070W89ADA002	600x600	
BM-TPL45030	30	LD030BC075W89ADA002	600x600	
BM-TPL45032	32	LD032BC080W89ADA002	600x600	
BM-TPL45036	36	LD040BC090W89ADA002	600x600	
BM-TPL45040	40	LD042BC100W89ADA002	600x600	
BM-TPL43020	20	LC 21/500/42 fixC SR ADV2	400x400	
BM-TPL44025	25	LC 25/600/42 fixC SR ADV2	500x500	
BM-TPL44028	28	LC 30/700/42 fixC SR ADV2	500x500	
BM-TPL44032	32	LC 35/800/44 fixC SR ADV2	500x500	
BM-TPL44036	36	LC 38/900/42 fixC SR ADV2	500x500	
BM-TPL44042	42	LC 44/1050/42 fixC SR ADV2	500x500	
BM-TPL45028	28	LC 30/700/42 fixC SR ADV2	600x600	
BM-TPL45032	32	LC 35/800/44 fixC SR ADV2	600x600	
BM-TPL45036	36	LC 38/900/42 fixC SR ADV2	600x600	
BM-TPL45042	42	LC 44/1050/42 fixC SR ADV2	600x600	

Annex model list

BM-TPL67015	15	TGPC-IH25-42-B1-0350	300×200	
BM-TPL67018	18	TGPC-IH25-42-B1-0450	300×200	
BM-TPL67016	16	TGPC-IH25-42-B1-0400	400×240	
BM-TPL67018	18	TGPC-IH25-42-B1-0450	400×240	
BM-TPL67020	20	TGPC-IH25-42-B1-0500	400×240	
BM-TPL67022	22	TGPC-IH25-42-B1-0550	400×240	
BM-TPL67025	25	TGPC-IH25-42-B1-0600	500×360	
BM-TPL67026	26	TGPC-IH25-42-B1-0600	500×360	
BM-TPL67028	28	TGPC-IH25-42-B1-0700	500×360	
BM-TPL67030	30	TGPC-IH40-42-B1-0750	500×360	
BM-TPL67032	32	TGPC-IH40-42-B1-0800	500×360	
BM-TPL67036	36	TGPC-IH40-42-B1-0850	500×360	
BM-TPL67040	40	TGPC-IH40-42-B1-0950	500×360	
BM-TPL68026	26	TGPC-IH25-42-B1-0600	600×380	
BM-TPL68028	28	TGPC-IH25-42-B1-0700	600×380	
BM-TPL68030	30	TGPC-IH40-42-B1-0750	600×380	
BM-TPL68032	32	TGPC-IH40-42-B1-0800	600×380	
BM-TPL68036	36	TGPC-IH40-42-B1-0850	600×380	
BM-TPL68040	40	TGPC-IH40-42-B1-0950	600×380	
BM-TPL67015	15	BK-BEL030-0350	300*200	
BM-TPL67018	18	BK-BEL030-0450	300*200	
BM-TPL67020	20	BK-BEL030-0500	400*240	
BM-TPL67025	25	BK-BEL030-0600	500×360	
BM-TPL67026	26	BK-BEL030-0650	500×360	
BM-TPL67028	28	BK-BEL030-0700	500×360	
BM-TPL67030	30	BK-BEL030-0750	500×360	
BM-TPL67032	32	BK-BEL042-0800	500×360	
BM-TPL67036	36	BK-BEL042-0900	500×360	
BM-TPL67040	40	BK-BEL042-1000	500×360	
BM-TPL68026	26	BK-BEL030-0650	600×380	
BM-TPL68028	28	BK-BEL030-0700	600×380	
BM-TPL68030	30	BK-BEL030-0750	600×380	
BM-TPL68032	32	BK-BEL042-0800	600×380	
BM-TPL68036	36	BK-BEL042-0900	600×380	
BM-TPL68040	40	BK-BEL042-1000	600×380	
BM-TPL67015	15	BK-PLL016-0350	300*200	
BM-TPL67018	18	BK-PLL022-0450	300*200	

Annex model list

BM-TPL67020	20	BK-PLL022-0500	400*240	
BM-TPL67025	25	BK-PLL022-0600	500*360	
BM-TPL67026	26	BK-PLL040-0650	500×360	
BM-TPL67028	28	BK-PLL040-0700	500×360	
BM-TPL67030	30	BK-PLL040-0750	500×360	
BM-TPL67032	32	BK-PLL040-0800	500×360	
BM-TPL67036	36	BK-PLL040-0900	500×360	
BM-TPL67040	40	BK-PLL040-1000	500×360	
BM-TPL68026	26	BK-PLL040-0650	600×380	
BM-TPL68028	28	BK-PLL040-0700	600×380	
BM-TPL68030	30	BK-PLL040-0750	600×380	
BM-TPL68032	32	BK-PLL040-0800	600×380	
BM-TPL68036	36	BK-PLL040-0900	600×380	
BM-TPL68040	40	BK-PLL040-1000	600×380	
BM-TPL67015	15	BK-PUL018A-0450Ad	300*200	
BM-TPL67018	18	BK-PUL018A-0450Ad	300*200	
BM-TPL67020	20	BK-PUL018A-0450Ad	400*240	
BM-TPL67025	25	BK-PUL030A-0700Ad	500*360	
BM-TPL67026	26	BK-PUL030A-0700Ad	500×360	
BM-TPL67028	28	BK-PUL030A-0700Ad	500×360	
BM-TPL67030	30	BK-PUL042A-1100Ad	500×360	
BM-TPL67032	32	BK-PUL042A-1100Ad	500×360	
BM-TPL67036	36	BK-PUL042A-1100Ad	500×360	
BM-TPL67040	40	BK-PUL042A-1100Ad	500×360	
BM-TPL68026	26	BK-PUL030A-0700Ad	600×380	
BM-TPL68028	28	BK-PUL030A-0700Ad	600×380	
BM-TPL68030	30	BK-PUL042A-1100Ad	600×380	
BM-TPL68032	32	BK-PUL042A-1100Ad	600×380	
BM-TPL68036	36	BK-PUL042A-1100Ad	600×380	
BM-TPL68040	40	BK-PUL042A-1100Ad	600×380	
BM-TPL67015	15	DL-20W450-LEF	300*200	
BM-TPL67018	18	DL-20W450-LEF	300*200	
BM-TPL67020	20	DL-20W450-LEF	400*240	
BM-TPL67025	25	DL-20W600-LEF	500*360	
BM-TPL67026	26	DL-30W600-LEF	500×360	
BM-TPL67028	28	DL-30W700-LEF	500×360	
BM-TPL67030	30	DL-40W750-LEF	500×360	
BM-TPL67032	32	DL-40W800-LEF	500×360	

Annex model list

BM-TPL67036	36	DL-40W900-LEF	500×360	
BM-TPL67040	40	DL-40W1A0-LEF	500×360	
BM-TPL68026	26	DL-30W600-LEF	600×380	
BM-TPL68028	28	DL-30W700-LEF	600×380	
BM-TPL68030	30	DL-40W750-LEF	600×380	
BM-TPL68032	32	DL-40W800-LEF	600×380	
BM-TPL68036	36	DL-40W900-LEF	600×380	
BM-TPL68040	40	DL-40W1A0-LEF	600×380	
BM-TPL67015	15	LD015BC035W89ADA002	300*200	
BM-TPL67018	18	LD019BC045W89ADA002	300*200	
BM-TPL67020	20	LD021BC050W89ADA002	400*240	
BM-TPL67025	25	LD025BC060W89ADA002	500*360	
BM-TPL67026	26	LD025BC065W89ADA002	500×360	
BM-TPL67028	28	LD030BC070W89ADA002	500×360	
BM-TPL67030	30	LD030BC075W89ADA002	500×360	
BM-TPL67032	32	LD032BC080W89ADA002	500×360	
BM-TPL67036	36	LD040BC090W89ADA002	500×360	
BM-TPL67040	40	LD042BC100W89ADA002	500×360	
BM-TPL68026	26	LD025BC065W89ADA002	600×380	
BM-TPL68028	28	LD030BC070W89ADA002	600×380	
BM-TPL68030	30	LD030BC075W89ADA002	600×380	
BM-TPL68032	32	LD032BC080W89ADA002	600×380	
BM-TPL68036	36	LD040BC090W89ADA002	600×380	
BM-TPL68040	40	LD042BC100W89ADA002	600×380	
BM-TPL67020	20	LC 21/500/42 fixC SR ADV2	400*240	
BM-TPL67025	25	LC 25/600/42 fixC SR ADV2	500×360	
BM-TPL67028	28	LC 30/700/42 fixC SR ADV2	500×360	
BM-TPL67032	32	LC 35/800/44 fixC SR ADV2	500×360	
BM-TPL67036	36	LC 38/900/42 fixC SR ADV2	500×360	
BM-TPL67042	42	LC 44/1050/42 fixC SR ADV2	500×360	
BM-TPL68028	28	LC 30/700/42 fixC SR ADV2	600×380	
BM-TPL68032	32	LC 35/800/44 fixC SR ADV2	600×380	
BM-TPL68036	36	LC 38/900/42 fixC SR ADV2	600×380	
BM-TPL68042	42	LC 44/1050/42 fixC SR ADV2	600×380	

Annex model list

BM-TPL69012	12	TGPC-IH25-42-B1-0300	Φ200	
BM-TPL69015	15	TGPC-IH25-42-B1-0350	Φ300	
BM-TPL69018	18	TGPC-IH25-42-B1-0450	Φ340	
BM-TPL69020	20	TGPC-IH25-42-B1-0500	Φ400	
BM-TPL69022	22	TGPC-IH25-42-B1-0550	Φ400	
BM-TPL69025	25	TGPC-IH25-42-B1-0600	Φ500	
BM-TPL69026	26	TGPC-IH25-42-B1-0600	Φ600	
BM-TPL69028	28	TGPC-IH25-42-B1-0700	Φ600	
BM-TPL69030	30	TGPC-IH40-42-B1-0750	Φ600	
BM-TPL69032	32	TGPC-IH40-42-B1-0800	Φ600	
BM-TPL69036	36	TGPC-IH40-42-B1-0850	Φ600	
BM-TPL69040	40	TGPC-IH40-42-B1-0950	Φ600	
BM-TPL69012	12	BK-BEL030-0300	Φ200	
BM-TPL69015	15	BK-BEL030-0350	Φ300	
BM-TPL69018	18	BK-BEL030-0450	Φ340	
BM-TPL69020	20	BK-BEL030-0500	Φ400	
BM-TPL69022	22	BK-BEL030-0550	Φ400	
BM-TPL69025	25	BK-BEL030-0600	Φ500	
BM-TPL69026	26	BK-BEL030-0650	Φ600	
BM-TPL69028	28	BK-BEL030-0700	Φ600	
BM-TPL69030	30	BK-BEL030-0750	Φ600	
BM-TPL69032	32	BK-BEL042-0800	Φ600	
BM-TPL69036	36	BK-BEL042-0900	Φ600	
BM-TPL69040	40	BK-BEL042-1000	Φ600	
BM-TPL69012	12	BK-PLL016-0300	Φ200	
BM-TPL69015	15	BK-PLL016-0350	Φ300	
BM-TPL69018	18	BK-PLL022-0450	Φ340	
BM-TPL69020	20	BK-PLL022-0500	Φ400	
BM-TPL69022	22	BK-PLL022-0550	Φ400	
BM-TPL69025	25	BK-PLL022-0600	Φ500	
BM-TPL69026	26	BK-PLL040-0650	Φ600	
BM-TPL69028	28	BK-PLL040-0700	Φ600	
BM-TPL69030	30	BK-PLL040-0750	Φ600	
BM-TPL69032	32	BK-PLL040-0800	Φ600	
BM-TPL69036	36	BK-PLL040-0900	Φ600	
BM-TPL69040	40	BK-PLL040-1000	Φ600	
BM-TPL69012	12	BK-PUL018A-0450Ad	Φ200	
BM-TPL69015	15	BK-PUL018A-0450Ad	Φ300	
BM-TPL69018	18	BK-PUL018A-0450Ad	Φ340	
BM-TPL69020	20	BK-PUL018A-0450Ad	Φ400	

Annex model list

BM-TPL69022	22	BK-PUL030A-0700Ad	Φ400	
BM-TPL69025	25	BK-PUL030A-0700Ad	Φ500	
BM-TPL69026	26	BK-PUL030A-0700Ad	Φ600	
BM-TPL69028	28	BK-PUL030A-0700Ad	Φ600	
BM-TPL69030	30	BK-PUL042A-1100Ad	Φ600	
BM-TPL69032	32	BK-PUL042A-1100Ad	Φ600	
BM-TPL69036	36	BK-PUL042A-1100Ad	Φ600	
BM-TPL69040	40	BK-PUL042A-1100Ad	Φ600	
BM-TPL69012	12	DL-12W300-LEF	Φ200	
BM-TPL69015	15	DL-20W450-LEF	Φ300	
BM-TPL69018	18	DL-20W450-LEF	Φ340	
BM-TPL69012	12	DL-12W300-LEF	Φ200	
BM-TPL69015	15	DL-20W450-LEF	Φ300	
BM-TPL69018	18	DL-20W450-LEF	Φ340	
BM-TPL69020	20	DL-20W450-LEF	Φ400	
BM-TPL69022	22	DL-20W450-LEF	Φ400	
BM-TPL69025	25	DL-20W600-LEF	Φ500	
BM-TPL69026	26	DL-30W600-LEF	Φ600	
BM-TPL69028	28	DL-30W700-LEF	Φ600	
BM-TPL69030	30	DL-40W750-LEF	Φ600	
BM-TPL69032	32	DL-40W800-LEF	Φ600	
BM-TPL69036	36	DL-40W900-LEF	Φ600	
BM-TPL69040	40	DL-40W1A0-LEF	Φ600	
BM-TPL69012	12	LD013BC030W89ADA002	Φ200	
BM-TPL69015	15	LD015BC035W89ADA002	Φ300	
BM-TPL69018	18	LD019BC045W89ADA002	Φ340	
BM-TPL69020	20	LD021BC050W89ADA002	Φ400	
BM-TPL69022	22	LD023BC055W89ADA002	Φ400	
BM-TPL69025	25	LD025BC060W89ADA002	Φ500	
BM-TPL69026	26	LD025BC065W89ADA002	Φ600	
BM-TPL69028	28	LD030BC070W89ADA002	Φ600	
BM-TPL69030	30	LD030BC075W89ADA002	Φ600	
BM-TPL69032	32	LD032BC080W89ADA002	Φ600	
BM-TPL69036	36	LD040BC090W89ADA002	Φ600	
BM-TPL69040	40	LD042BC100W89ADA002	Φ600	
BM-TPL69020	20	LC 21/500/42 fixC SR ADV2	Φ400	
BM-TPL69025	25	LC 25/600/42 fixC SR ADV2	Φ500	
BM-TPL69028	28	LC 30/700/42 fixC SR ADV2	Φ600	
BM-TPL69032	32	LC 35/800/44 fixC SR ADV2	Φ600	
BM-TPL69036	36	LC 38/900/42 fixC SR ADV2	Φ600	
BM-TPL69042	42	LC 44/1050/42 fixC SR ADV2	Φ600	

Annex model list

BM-TPL70012	12	TGPC-IH25-42-B1-0300	200×200	
BM-TPL70015	15	TGPC-IH25-42-B1-0350	300×300	
BM-TPL70018	18	TGPC-IH25-42-B1-0450	300×300	
BM-TPL70020	20	TGPC-IH25-42-B1-0500	400×400	
BM-TPL70022	22	TGPC-IH25-42-B1-0550	400×400	
BM-TPL70025	25	TGPC-IH25-42-B1-0600	500×500	
BM-TPL70026	26	TGPC-IH25-42-B1-0600	600×600	
BM-TPL70028	28	TGPC-IH25-42-B1-0700	600×600	
BM-TPL70030	30	TGPC-IH40-42-B1-0750	600×600	
BM-TPL70032	32	TGPC-IH40-42-B1-0800	600×600	
BM-TPL70036	36	TGPC-IH40-42-B1-0850	600×600	
BM-TPL70040	40	TGPC-IH40-42-B1-0950	600×600	
BM-TPL70012	12	BK-BEL030-0300	200*200	
BM-TPL70015	15	BK-BEL030-0350	300*300	
BM-TPL70018	18	BK-BEL030-0450	300*300	
BM-TPL70020	20	BK-BEL030-0500	400*400	
BM-TPL70022	22	BK-BEL030-0550	400*400	
BM-TPL70025	25	BK-BEL030-0600	500*500	
BM-TPL70026	26	BK-BEL030-0650	600*600	
BM-TPL70028	28	BK-BEL030-0700	600*600	
BM-TPL70030	30	BK-BEL030-0750	600*600	
BM-TPL70032	32	BK-BEL042-0800	600*600	
BM-TPL70036	36	BK-BEL042-0900	600*600	
BM-TPL70040	40	BK-BEL042-1000	600*600	
BM-TPL70012	12	BK-PLL016-0300	200*200	
BM-TPL70015	15	BK-PLL016-0350	300*300	
BM-TPL70018	18	BK-PLL022-0450	300*300	
BM-TPL70020	20	BK-PLL022-0500	400*400	
BM-TPL70022	22	BK-PLL022-0550	400*400	
BM-TPL70025	25	BK-PLL022-0600	500*500	
BM-TPL70026	26	BK-PLL040-0650	600*600	
BM-TPL70028	28	BK-PLL040-0700	600*600	
BM-TPL70030	30	BK-PLL040-0750	600*600	
BM-TPL70032	32	BK-PLL040-0800	600*600	
BM-TPL70036	36	BK-PLL040-0900	600*600	
BM-TPL70040	40	BK-PLL040-1000	600*600	
BM-TPL70012	12	BK-PUL018A-0450Ad	200*200	
BM-TPL70015	15	BK-PUL018A-0450Ad	300*300	
BM-TPL70018	18	BK-PUL018A-0450Ad	300*300	
BM-TPL70020	20	BK-PUL018A-0450Ad	400*400	

Annex model list

BM-TPL70022	22	BK-PUL030A-0700Ad	400*400	
BM-TPL70025	25	BK-PUL030A-0700Ad	500*500	
BM-TPL70026	26	BK-PUL030A-0700Ad	600*600	
BM-TPL70028	28	BK-PUL030A-0700Ad	600*600	
BM-TPL70030	30	BK-PUL042A-1100Ad	600*600	
BM-TPL70032	32	BK-PUL042A-1100Ad	600*600	
BM-TPL70036	36	BK-PUL042A-1100Ad	600*600	
BM-TPL70040	40	BK-PUL042A-1100Ad	600*600	
BM-TPL70012	12	DL-12W300-LEF	200*200	
BM-TPL70015	15	DL-20W450-LEF	300*300	
BM-TPL70018	18	DL-20W450-LEF	300*300	
BM-TPL70020	20	DL-20W450-LEF	400*400	
BM-TPL70022	22	DL-20W450-LEF	400*400	
BM-TPL70025	25	DL-20W600-LEF	500*500	
BM-TPL70026	26	DL-30W600-LEF	600*600	
BM-TPL70028	28	DL-30W700-LEF	600*600	
BM-TPL70030	30	DL-40W750-LEF	600*600	
BM-TPL70032	32	DL-40W800-LEF	600*600	
BM-TPL70036	36	DL-40W900-LEF	600*600	
BM-TPL70040	40	DL-40W1A0-LEF	600*600	
BM-TPL70012	12	LD013BC030W89ADA002	200*200	
BM-TPL70015	15	LD015BC035W89ADA002	300*300	
BM-TPL70018	18	LD019BC045W89ADA002	300*300	
BM-TPL70020	20	LD021BC050W89ADA002	400*400	
BM-TPL70022	22	LD023BC055W89ADA002	400*400	
BM-TPL70025	25	LD025BC060W89ADA002	500*500	
BM-TPL70026	26	LD025BC065W89ADA002	600*600	
BM-TPL70028	28	LD030BC070W89ADA002	600*600	
BM-TPL70030	30	LD030BC075W89ADA002	600*600	
BM-TPL70032	32	LD032BC080W89ADA002	600*600	
BM-TPL70036	36	LD040BC090W89ADA002	600*600	
BM-TPL70040	40	LD042BC100W89ADA002	600*600	
BM-TPL70020	20	LC 21/500/42 fixC SR ADV2	400*400	
BM-TPL70025	25	LC 25/600/42 fixC SR ADV2	500*500	
BM-TPL70028	28	LC 30/700/42 fixC SR ADV2	600*600	
BM-TPL70032	32	LC 35/800/44 fixC SR ADV2	600*600	
BM-TPL70036	36	LC 38/900/42 fixC SR ADV2	600*600	
BM-TPL70042	42	LC 44/1050/42 fixC SR ADV2	600*600	

Annex model list

BM-TPL22012	12	TGPC-IH25-42-B1-0300	300×600	
BM-TPL22015	15	TGPC-IH25-42-B1-0350	300×600	
BM-TPL22018	18	TGPC-IH25-42-B1-0450	300×600	
BM-TPL22020	20	TGPC-IH25-42-B1-0500	300×600	
BM-TPL22022	22	TGPC-IH25-42-B1-0550	300×600	
BM-TPL22025	25	TGPC-IH25-42-B1-0600	300×600	
BM-TPL24012	12	TGPC-IH25-42-B1-0300	300×1200	
BM-TPL24015	15	TGPC-IH25-42-B1-0350	300×1200	
BM-TPL24018	18	TGPC-IH25-42-B1-0450	300×1200	
BM-TPL24020	20	TGPC-IH25-42-B1-0500	300×1200	
BM-TPL24022	22	TGPC-IH25-42-B1-0550	300×1200	
BM-TPL24025	25	TGPC-IH25-42-B1-0600	300×1200	
BM-TPL24030	30	TGPC-IH40-42-B1-0750	300×1200	
BM-TPL24032	32	TGPC-IH40-42-B1-0800	300×1200	
BM-TPL24036.	36	TGPC-IH40-42-B1-0850	300×1200	
BM-TPL24040	40	TGPC-IH40-42-B1-0950	300×1200	
BM-TPL24045	45	TGPC-IH46-42-B1-1100	300×1200	
BM-TPL22012	12	BK-BEL030-0300	300*600	
BM-TPL22015	15	BK-BEL030-0350	300*600	
BM-TPL22018	18	BK-BEL030-0450	300*600	
BM-TPL22020	20	BK-BEL030-0500	300*600	
BM-TPL22022	22	BK-BEL030-0550	300*600	
BM-TPL22025	25	BK-BEL030-0600	300*600	
BM-TPL24012	12	BK-BEL030-0300	300*1200	
BM-TPL24015	15	BK-BEL030-0350	300*1200	
BM-TPL24018	18	BK-BEL030-0450	300*1200	
BM-TPL24020	20	BK-BEL030-0500	300*1200	
BM-TPL24022	22	BK-BEL030-0550	300*1200	
BM-TPL24025	25	BK-BEL030-0600	300*1200	
BM-TPL24030	30	BK-BEL030-0750	300*1200	
BM-TPL24032	32	BK-BEL042-0800	300*1200	
BM-TPL24036.	36	BK-BEL042-0900	300*1200	
BM-TPL24040	40	BK-BEL042-1000	300*1200	
BM-TPL22012	12	BK-PLL016-0300	300*600	
BM-TPL22015	15	BK-PLL016-0350	300*600	
BM-TPL22018	18	BK-PLL022-0450	300*600	
BM-TPL22020	20	BK-PLL022-0500	300*600	
BM-TPL22022	22	BK-PLL022-0550	300*600	

Annex model list

BM-TPL22025	25	BK-PLL022-0600	300*600	
BM-TPL24012	12	BK-PLL016-0300	300*1200	
BM-TPL24015	15	BK-PLL016-0350	300*1200	
BM-TPL24018	18	BK-PLL022-0450	300*1200	
BM-TPL24020	20	BK-PLL022-0500	300*1200	
BM-TPL24022	22	BK-PLL022-0550	300*1200	
BM-TPL24025	25	BK-PLL022-0600	300*1200	
BM-TPL24030	30	BK-PLL040-0750	300*1200	
BM-TPL24032	32	BK-PLL040-0800	300*1200	
BM-TPL24036.	36	BK-PLL040-0900	300*1200	
BM-TPL24040	40	BK-PLL040-1000	300*1200	
BM-TPL24045	45	BK-PLL042-1100	300*1200	
BM-TPL24050	50	BK-PLL056-1250	300*1200	
BM-TPL24060	60	BK-PLL056-1400	300*1200	
BM-TPL22012	12	BK-PUL018A-0450Ad	300*600	
BM-TPL22015	15	BK-PUL018A-0450Ad	300*600	
BM-TPL22018	18	BK-PUL018A-0450Ad	300*600	
BM-TPL22020	20	BK-PUL018A-0450Ad	300*600	
BM-TPL22022	22	BK-PUL030A-0700Ad	300*600	
BM-TPL22025	25	BK-PUL030A-0700Ad	300*600	
BM-TPL24012	12	BK-PUL018A-0450Ad	300*1200	
BM-TPL24015	15	BK-PUL018A-0450Ad	300*1200	
BM-TPL24018	18	BK-PUL018A-0450Ad	300*1200	
BM-TPL24020	20	BK-PUL018A-0450Ad	300*1200	
BM-TPL24022	22	BK-PUL030A-0700Ad	300*1200	
BM-TPL24025	25	BK-PUL030A-0700Ad	300*1200	
BM-TPL24030	30	BK-PUL042A-1100Ad	300*1200	
BM-TPL24032	32	BK-PUL042A-1100Ad	300*1200	
BM-TPL24036.	36	BK-PUL042A-1100Ad	300*1200	
BM-TPL24040	40	BK-PUL042A-1100Ad	300*1200	
BM-TPL24045	45	BK-PUL042A-1100Ad	300*1200	
BM-TPL24050	50	BK-PUL060A-2000Ad	300*1200	
BM-TPL24060	60	BK-PUL060A-2000Ad	300*1200	
BM-TPL22012	12	DL-12W300-LEF	300*600	
BM-TPL22015	15	DL-20W450-LEF	300*600	
BM-TPL22018	18	DL-20W450-LEF	300*600	
BM-TPL22020	20	DL-20W450-LEF	300*600	
BM-TPL22022	22	DL-20W450-LEF	300*600	
BM-TPL22025	25	DL-20W600-LEF	300*600	
BM-TPL24012	12	DL-12W300-LEF	300*1200	
BM-TPL24015	15	DL-20W450-LEF	300*1200	

Annex model list

BM-TPL24018	18	DL-20W450-LEF	300*1200	
BM-TPL24020	20	DL-20W450-LEF	300*1200	
BM-TPL24022	22	DL-20W450-LEF	300*1200	
BM-TPL24025	25	DL-20W600-LEF	300*1200	
BM-TPL24030	30	DL-40W750-LEF	300*1200	
BM-TPL24032	32	DL-40W800-LEF	300*1200	
BM-TPL24036.	36	DL-40W900-LEF	300*1200	
BM-TPL24040	40	DL-40W1A0-LEF	300*1200	
BM-TPL24045	45	DL-50W1A1-LEF	300*1200	
BM-TPL24050	50	DL-50W1A2-LEF	300*1200	
BM-TPL22012	12	LD013BC030W89ADA002	300*600	
BM-TPL22015	15	LD015BC035W89ADA002	300*600	
BM-TPL22018	18	LD019BC045W89ADA002	300*600	
BM-TPL22020	20	LD021BC050W89ADA002	300*600	
BM-TPL22022	22	LD023BC055W89ADA002	300*600	
BM-TPL22025	25	LD025BC060W89ADA002	300*600	
BM-TPL24012	12	LD013BC030W89ADA002	300*1200	
BM-TPL24015	15	LD015BC035W89ADA002	300*1200	
BM-TPL24018	18	LD019BC045W89ADA002	300*1200	
BM-TPL24020	20	LD021BC050W89ADA002	300*1200	
BM-TPL24022	22	LD023BC055W89ADA002	300*1200	
BM-TPL24025	25	LD025BC060W89ADA002	300*1200	
BM-TPL24030	30	LD030BC075W89ADA002	300*1200	
BM-TPL24032	32	LD032BC080W89ADA002	300*1200	
BM-TPL24036.	36	LD040BC090W89ADA002	300*1200	
BM-TPL24040	40	LD042BC100W89ADA002	300*1200	
BM-TPL22020	20	LC 21/500/42 fixC SR ADV2	300*600	
BM-TPL22025	25	LC 25/600/42 fixC SR ADV2	300*600	
BM-TPL24020	20	LC 21/500/42 fixC SR ADV2	300*1200	
BM-TPL24025	25	LC 25/600/42 fixC SR ADV2	300*1200	
BM-TPL24032	32	LC 35/800/44 fixC SR ADV2	300*1200	
BM-TPL24036.	36	LC 38/900/42 fixC SR ADV2	300*1200	
BM-TPL24042	42	LC 44/1050/42 fixC SR ADV2	300*1200	

Annex model list

BM-FPL71024	24	TGPC-IH25-42-B1-0550	595×595	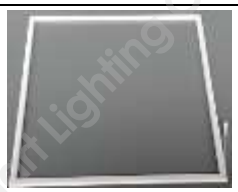
BM-FPL71026	26	TGPC-IH25-42-B1-0600	595×595	
BM-FPL71028	28	TGPC-IH25-42-B1-070	595×595	
BM-FPL71030	30	TGPC-IH25-42-B1-0750	595×595	
BM-FPL71032	32	TGPC-IH25-42-B1-0800	595×595	
BM-FPL71036	36	TGPC-IH25-42-B1-0850	595×595	
BM-FPL71040	40	TGPC-IH25-42-B1-0950	595×595	
BM-FPL71042	42	TGPC-IH46-42-B1-1050	595×595	
BM-FPL71045	45	TGPC-IH46-42-B1-1100	595×595	
BM-FPL72030	30	TGPC-IH25-42-B1-0750	295×1195	
BM-FPL72032	32	TGPC-IH25-42-B1-0800	295×1195	
BM-FPL72036	36	TGPC-IH25-42-B1-0850	295×1195	
BM-FPL72040	40	TGPC-IH25-42-B1-0950	295×1195	
BM-FPL72042	42	TGPC-IH46-42-B1-1050	295×1195	
BM-FPL72045	45	TGPC-IH46-42-B1-1100	295×1195	
BM-FPL71024	24	BK-BEL030-0600	595x595	
BM-FPL71026	26	BK-BEL030-0650	595x595	
BM-FPL71028	28	BK-BEL030-0700	595x595	
BM-FPL71030	30	BK-BEL030-0750	595*595	
BM-FPL71032	32	BK-BEL042-0800	595*595	
BM-FPL71036	36	BK-BEL042-0900	595*595	
BM-FPL71040	40	BK-BEL042-1000	595*595	
BM-FPL71042	42	BK-BEL042-1050	595*595	
BM-FPL72030	30	BK-BEL030-0750	295*1195	
BM-FPL72032	32	BK-BEL042-0800	295*1195	
BM-FPL72036	*36*	BK-BEL042-0900	295*1195	
BM-FPL72040	*40*	BK-BEL042-1000	295*1195	
BM-FPL72042	*42*	BK-BEL042-1050	295*1195	
BM-FPL71024	24	BK-PLL022-0600	595x595	
BM-FPL71026	26	BK-PLL040-0650	595x595	
BM-FPL71028	28	BK-PLL040-0700	595x595	
BM-FPL71030	30	BK-PLL040-0750	595*595	
BM-FPL71032	32	BK-PLL040-0800	595*595	
BM-FPL71036	36	BK-PLL040-0900	595*595	
BM-FPL71040	40	BK-PLL040-1000	595*595	
BM-FPL71042	42	BK-PLL042-1050	595*595	
BM-FPL71045	45	BK-PLL042-1100	595*595	
BM-FPL71048	48	BK-PLL056-1200	595*595	
BM-FPL72030	30	BK-PLL040-0750	295*1195	

Annex model list

BM-FPL72032	32	BK-PLL040-0800	295*1195	
BM-FPL72036	36	BK-PLL040-0900	295*1195	
BM-FPL72040	40	BK-PLL040-1000	295*1195	
BM-FPL72042	42	BK-PLL042-1050	295*1195	
BM-FPL72045	45	BK-PLL042-1100	295*1195	
BM-FPL72048	48	BK-PLL056-1200	295*1195	
BM-FPL72050	50	BK-PLL056-1250	295*1195	
BM-FPL72054	54	BK-PLL056-1350	295*1195	
BM-FPL72060	60	BK-PLL056-1400	295*1195	
BM-FPL71024	24	BK-PUL030A-0700Ad	595x595	
BM-FPL71026	26	BK-PUL030A-0700Ad	595x595	
BM-FPL71028	28	BK-PUL030A-0700Ad	595x595	
BM-FPL71030	30	BK-PUL042A-1100Ad	595*595	
BM-FPL71032	32	BK-PUL042A-1100Ad	595*595	
BM-FPL71036	36	BK-PUL042A-1100Ad	595*595	
BM-FPL71040	40	BK-PUL042A-1100Ad	595*595	
BM-FPL71042	42	BK-PUL042A-1100Ad	595*595	
BM-FPL71045	45	BK-PUL042A-1100Ad	595*595	
BM-FPL71048	48	BK-PUL060A-2000Ad	595*595	
BM-FPL72030	30	BK-PUL042A-1100Ad	295*1195	
BM-FPL72032	32	BK-PUL042A-1100Ad	295*1195	
BM-FPL72036	36	BK-PUL042A-1100Ad	295*1195	
BM-FPL72040	40	BK-PUL042A-1100Ad	295*1195	
BM-FPL72042	42	BK-PUL042A-1100Ad	295*1195	
BM-FPL72045	45	BK-PUL042A-1100Ad	295*1195	
BM-FPL72048	48	BK-PUL060A-2000Ad	295*1195	
BM-FPL72050	50	BK-PUL060A-2000Ad	295*1195	
BM-FPL72054	54	BK-PUL060A-2000Ad	295*1195	
BM-FPL72060	60	BK-PUL060A-2000Ad	295*1195	
BM-FPL71024	24	DL-20W600-LEF	595x595	
BM-FPL71026	26	DL-30W600-LEF	595x595	
BM-FPL71028	28	DL-30W650-LEF	595x595	
BM-FPL71030	30	DL-40W750-LEF	595*595	
BM-FPL71032	32	DL-40W800-LEF	595*595	
BM-FPL71036	36	DL-40W900-LEF	595*595	
BM-FPL71040	40	DL-40W1A0-LEF	595*595	
BM-FPL71042	42	DL-40W1A05-LEF	595*595	
BM-FPL71045	45	DL-50W1A1-LEF	595*595	
BM-FPL71048	48	DL-50W1A15-LEF	595*595	
BM-FPL72030	30	DL-40W750-LEF	295*1195	
BM-FPL72032	32	DL-40W800-LEF	295*1195	

Annex model list

BM-FPL72036	*36*	DL-40W900-LEF	295*1195	
BM-FPL72040	*40*	DL-40W1A0-LEF	295*1195	
BM-FPL72042	*42*	DL-40W1A05-LEF	295*1195	
BM-FPL72045	*45*	DL-50W1A1-LEF	295*1195	
BM-FPL72048	*48*	DL-50W1A15-LEF	295*1195	
BM-FPL72050	*50*	DL-50W1A2-LEF	295*1195	
BM-FPL72054	*54*	DL-50W1A2-LEF	295*1195	
BM-FPL71024	24	LD025BC060W89ADA002	595x595	
BM-FPL71026	26	LD025BC065W89ADA002	595x595	
BM-FPL71028	28	LD030BC070W89ADA002	595x595	
BM-FPL71030	30	LD030BC075W89ADA002	595*595	
BM-FPL71032	32	LD032BC080W89ADA002	595*595	
BM-FPL71036	36	LD040BC090W89ADA002	595*595	
BM-FPL71040	40	LD042BC100W89ADA002	595*595	
BM-FPL71042	42	LD042BC100W89ADA002	595*595	
BM-FPL72030	30	LD030BC075W89ADA002	295*1195	
BM-FPL72032	32	LD032BC080W89ADA002	295*1195	
BM-FPL72036	*36*	LD040BC090W89ADA002	295*1195	
BM-FPL72040	*40*	LD042BC100W89ADA002	295*1195	
BM-FPL72042	*42*	LD042BC100W89ADA002	295*1195	
BM-FPL71024	24	LC 25/600/42 fixC SR ADV2	595*595	
BM-FPL71028	28	LC 30/700/42 fixC SR ADV2	595*595	
BM-FPL71032	32	LC 35/800/44 fixC SR ADV2	595*595	
BM-FPL71036	36	LC 38/900/42 fixC SR ADV2	595*595	
BM-FPL71042	42	LC 44/1050/42 fixC SR ADV2	595*595	
BM-FPL72032	32	LC 35/800/44 fixC SR ADV2	295*1195	
BM-FPL72036	*36*	LC 38/900/42 fixC SR ADV2	295*1195	
BM-FPL72042	*42*	LC 44/1050/42 fixC SR ADV2	295*1195	

Annex model list

Model: BM-PL-XXXXX series; BM-TPL-XXXXX series; BM-FPL-XXXXX series; BM-BPL-XXXXX series

Position of “X”	Rang of “X”	Means of “X”
1st; 2nd	00; 01; 02; 03; 04; 05; 06; 07; 08; 09; 10	Different diameters of circle
	11,12,13,14,15,16,17,18,19,20	Different sizes of small square panel light
	21，22，23，24，25，26，27，28，29	Different sizes of rectangle
	31，32，33，34，35，36，37，38，39	Different diameters of round transparent panel light
	41.42，43，44，45，46，47，48，49	Different sizes of square transparent panel light
	67，68	Different diameters of oval transparent panel light
	69	Different sizes of octagon transparent panel light
	70	Different sizes of special shaped transparent panel light
	71; 72; 73; 74; 75; 76; 77; 78; 79	Different sizes of frame light
	81，82，83，84，85，86，87，89	Different sizes of back lighting panel light
	91，92，93，94，95，96，97，98，99	Different sizes of waterproof panel light
3rd; 4th; 5th	005~080	Luminaire rated power

Annex manual (partly)

www.benchmark-led.com

Benchmark Smart Lighting Co., Ltd
TEL:+86-512-65378857 FAX:+86-512-65378857
ADD/ No.81, Chunlan Road, Xiangcheng District, Suzhou City, Jiangsu, PRC.

Benchmark Smart Lighting Co., Ltd.

Specification for Approval

Product Name:	LED Transparent Panel 300 * 1200mm
Product No.:	BM-TPL24040(F1-40W-80-80CCT)
Wersion	V1.0
Issue Date:	2018-5-28

Annex manual (partly)

Product Pictures

Main technical parameters

300*1200LED Transparent Panel technical parameters LED				
Part Number： BM-TPL24040				
No.	Item	Description		
1	Input voltage	☐100-240V～ ■220-240V～		
2	Power Consumption	40W±10%		
3	Luminous Flux	3200lm±10%		
4	Emitting Color	Warm white	Neutral white	Cool white
5	Color Temperature	3000K±150K	4000K±250K	6500K±450K
6	Luminous Efficiency	80lm/w		
7	SDCM	≤6		
8	Beam Angle	360°		

Annex manual (partly)

9	Lifespan	30,000 Hour
10	CRI Ra	⩾80
11	PF	⩾0.9
12	Certificates	RoHS CE TUV GS
13	Net Weight	≈3.1KG
14	Gross weight	≈4.55KG
15	Size	300*1200*48 mm
16	LGP thickness	5mm
17	LED brand	Bridgelux
18	THD	⩽20%
19	Operating Ambient	-20℃ to +25℃
20	Storage Ambient	-20℃ to +50℃
21	IP code	IP20
22	Installation	■Suspending wire ■ Ceiling
23	CCT	√

Light Distribution Graph

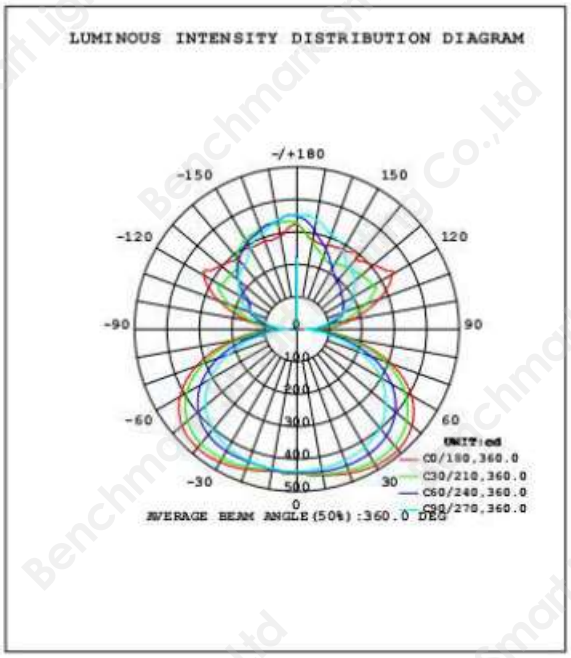

Illumination Intensity Chart

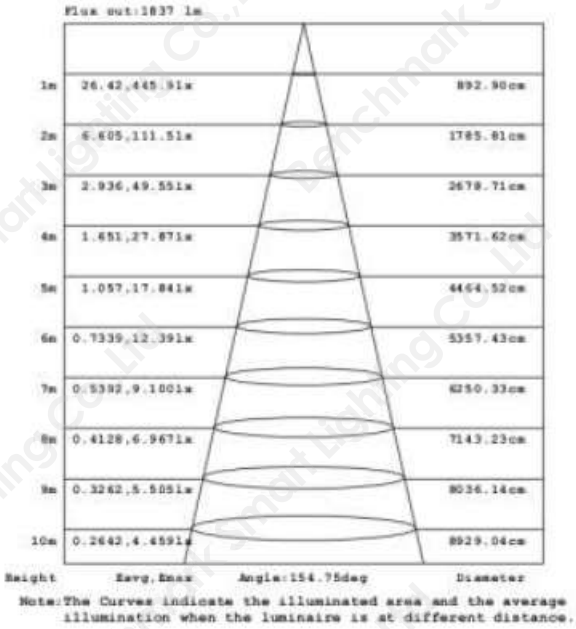

Annex manual (partly)

Installation

Notes:

1. The input voltage of panel light is 220-240V~.The size of the power input line shall not be less than 0.75 mm^2 (60227 IEC52).
2. Please make sure that the power is cut off during installation and maintenance. Turn on the light on only after the installation is finished.
3. Make sure there is good ventilation on the back of the panel light. The usage of this luminaire can not infringe any anti-fire rules.
4. Before the installation, please check the building structure and the materials of the mounting location to make sure it is secure and can support the weight of the LED panel.
5. Do not use that luminaire in the bathrooms.
6. Please contact to the supplier if there is any doubt about this manual.

Installation Accessories Kit-1: Metal suspending wire

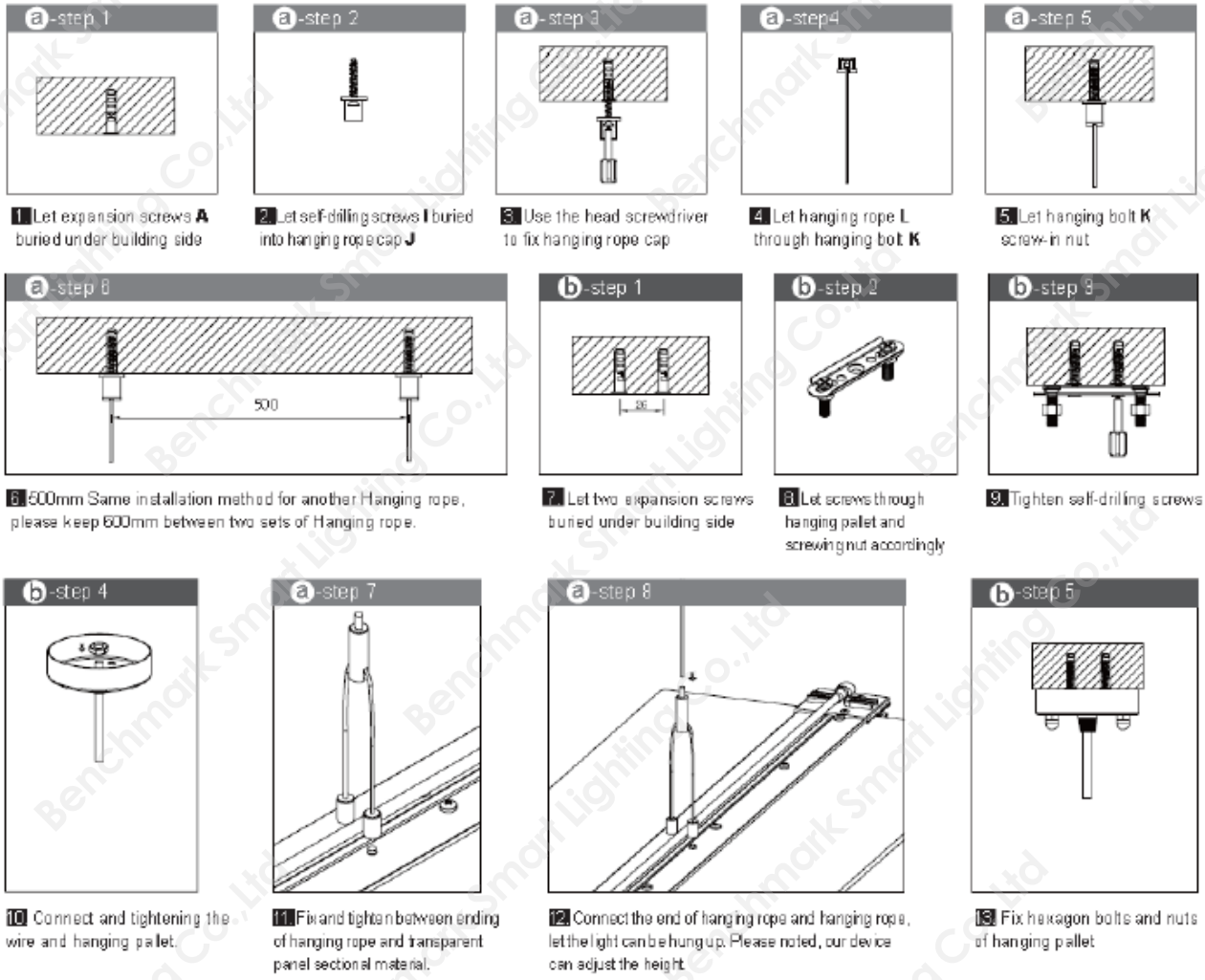

Annex manual (partly)

Installation Accessories Kit-2: Ceiling installation

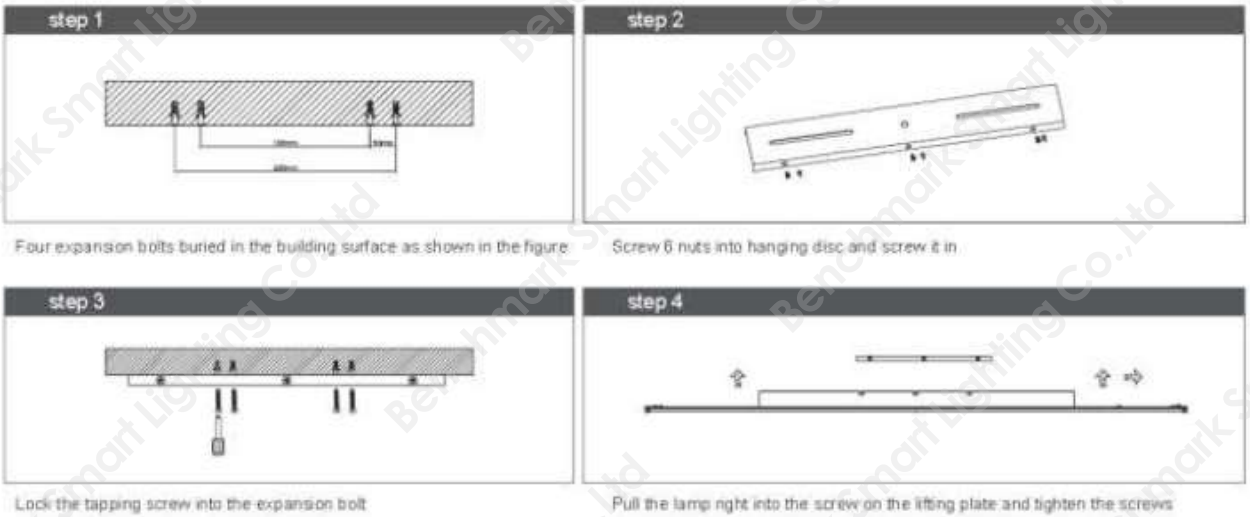

The light source of this luminaire is not replaceable; when the light source reaches its end of life the whole luminaire shall be replaced.

If the external flexible cable or cord of this luminaire is damaged, it shall be replaced by a special cord or cord exclusively available from the manufacturer or his service agent.

※All above suit for all square panel light.
All product information is subject to sample

Annex pictures

Overview of model BM-TPL24040

Suspension wire

Annex pictures

Wire entry

Internal view

Annex pictures

Independent SELV driver

Wire connecting LED module with cord anchorage

Annex pictures

End cover (fixed by glue)

Detailed view

Annex pictures

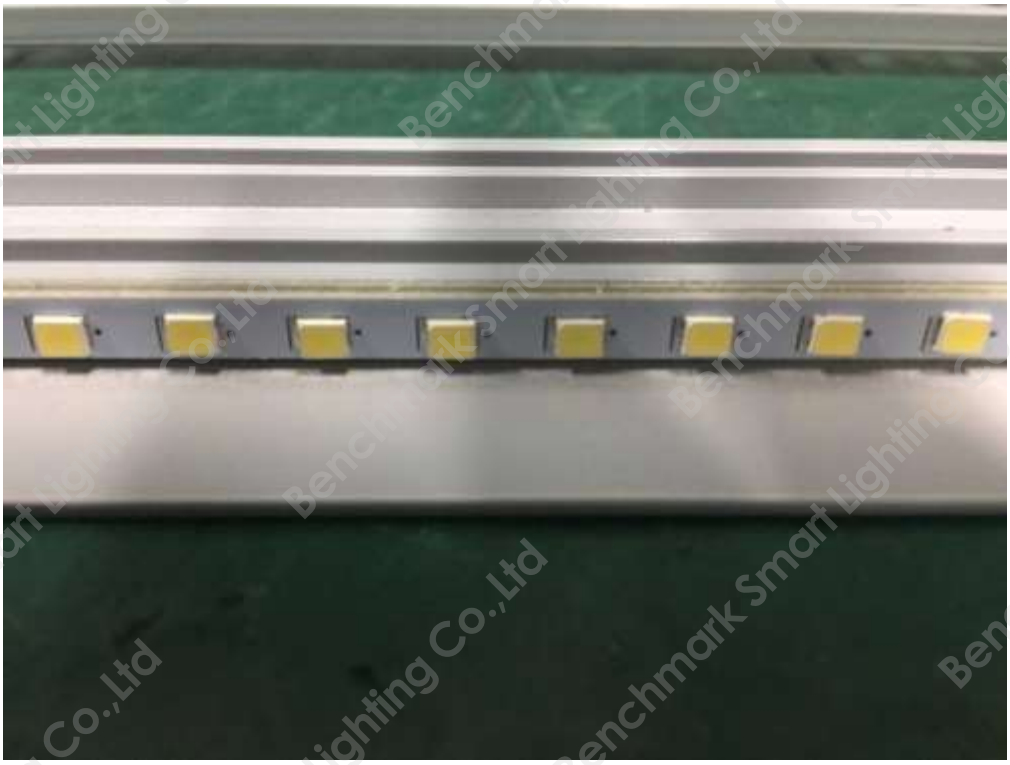

LED module

Light guide plate

Annex pictures

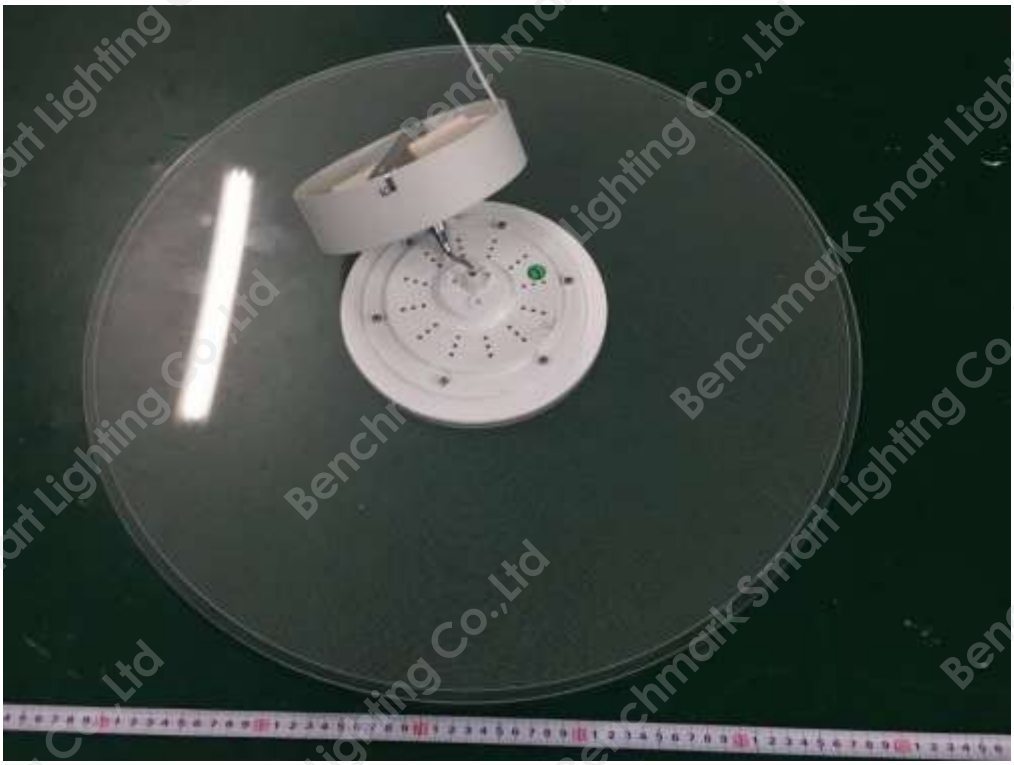

Overview of model BM-TPL00040

Internal view of connection box

Annex pictures

Cord anchorage at both ends

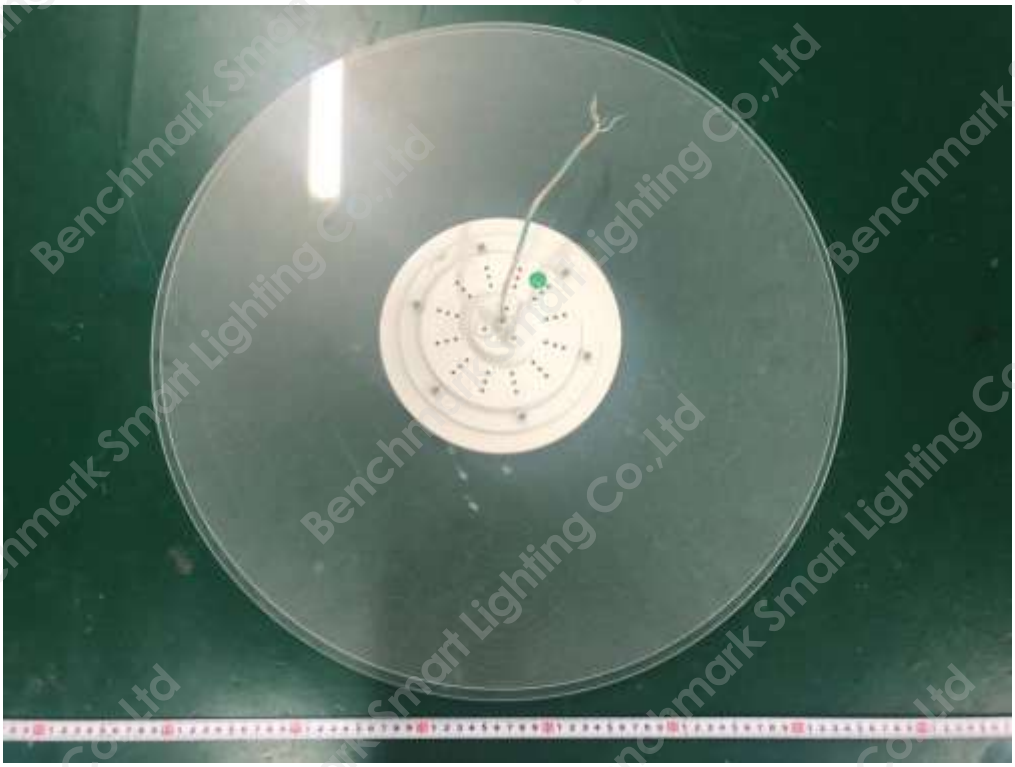

Top view of luminaire

Annex pictures

Bottom view of luminaire

Detailed view

Annex pictures

LED module

LEDs

Annex pictures

Overview of model BM-PL20024

Cord anchorage on panel

Annex pictures

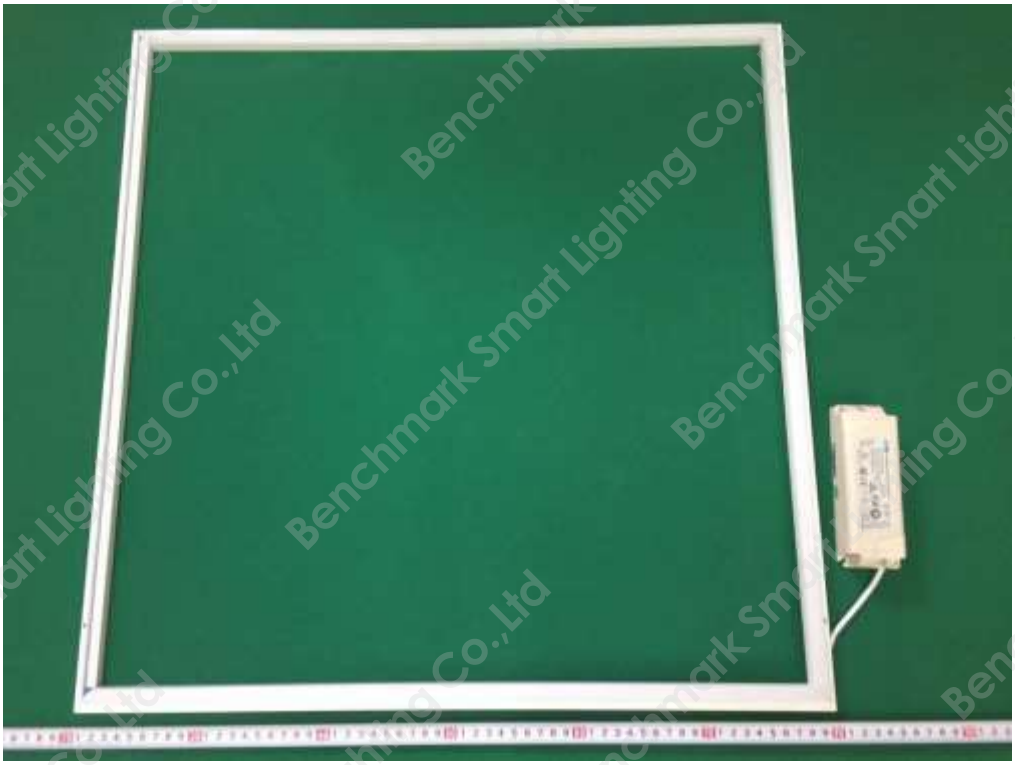

Overview of model BM-FPL71040 with LED driver BM-FPL71040

Cord anchorage

Annex pictures

Detailed view

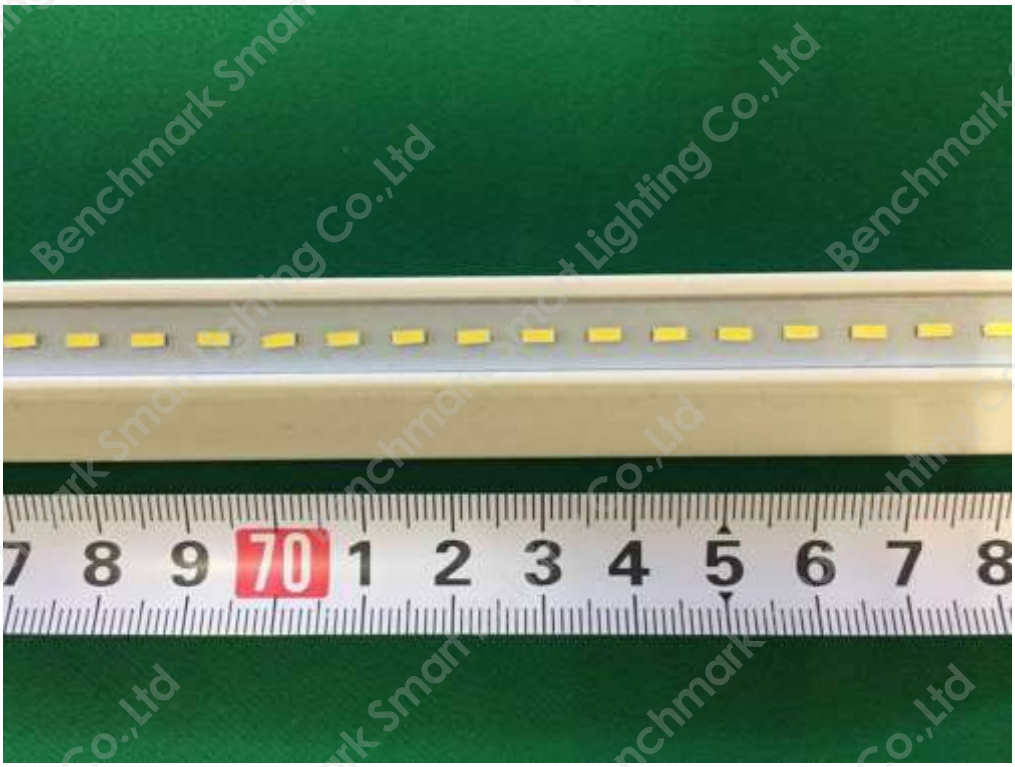

LEDs

Annex pictures

Overview of LED driver LD042BC100W89ADA002

Detailed view

Annex pictures

Detailed view

Top view of LED driver

Annex pictures

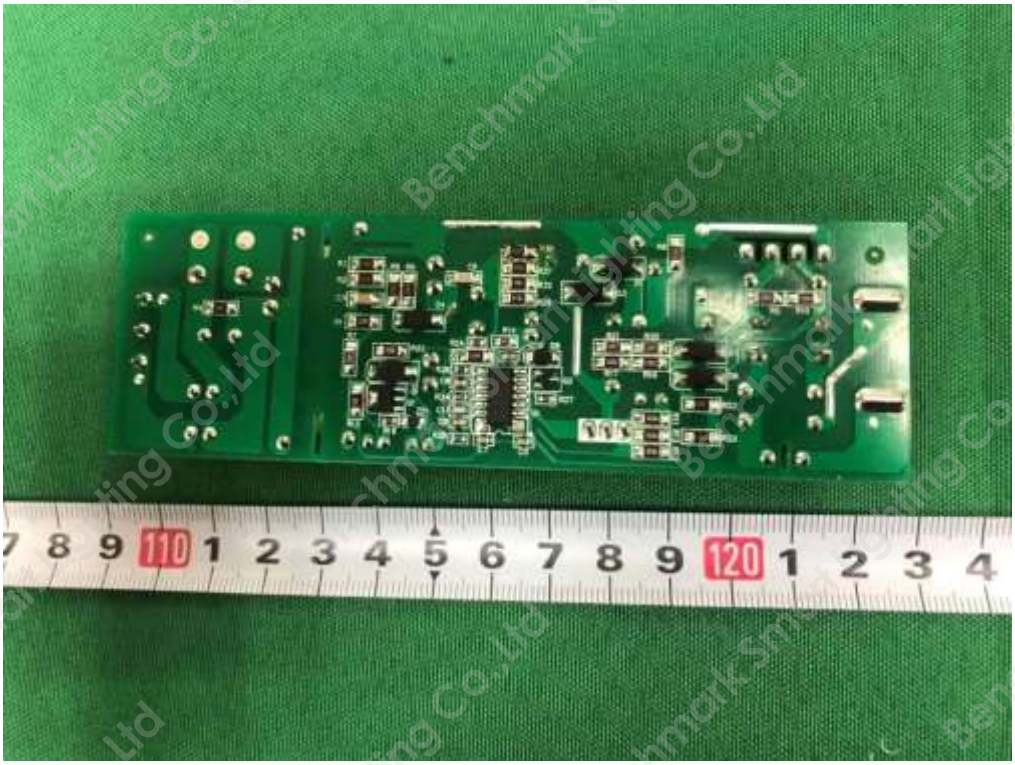

Bottom view of LED driver

Transformer

Annex pictures

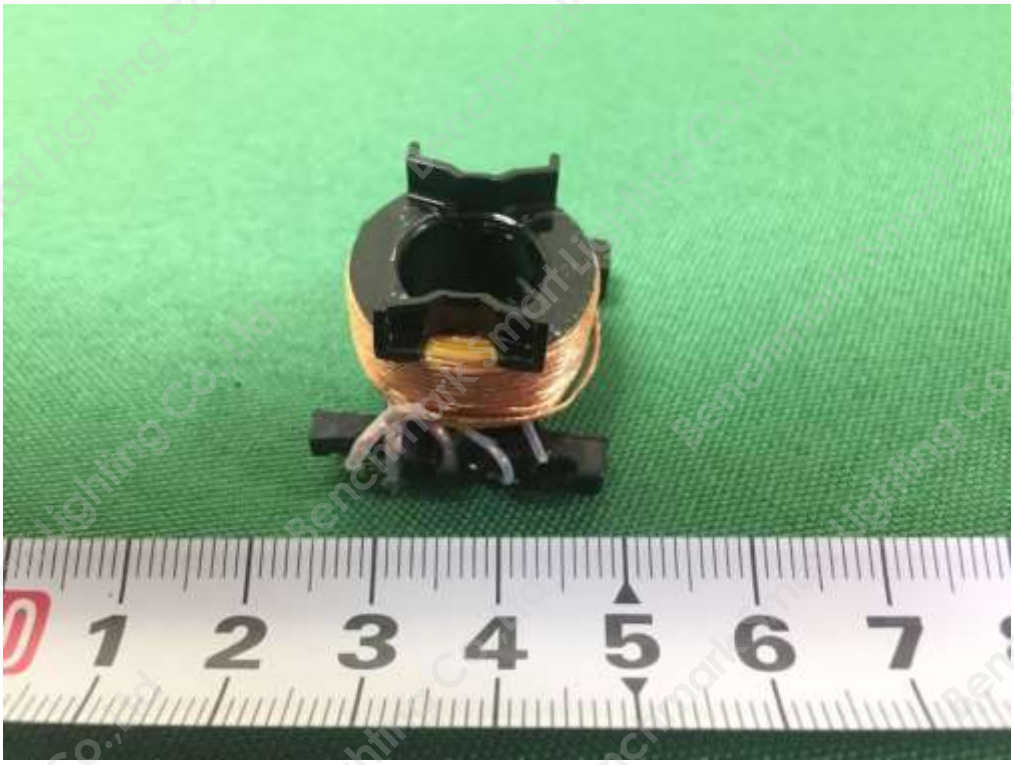

Primary winding
(3-layer tapes between primary winding and triple-insulation wire and they don't contact each other)

Detailed view

Annex pictures

Secondary winding (triple insulated wire)

Overview of LED driver BK-PPL042-1000
(LED driver is wholly sealed with glue)

Annex pictures

Back view of LED driver BK-PPL042-1000

Top view of LED driver (without glue)

Annex pictures

Bottom view of LED driver (without glue)

Transformer

Annex pictures

Primary winding
(3-layer tapes between primary winding and triple-insulation wire and they don't contact each other)

Secondary winding (triple insulated wire)

----------END----------